KINGSPORT BOARD OF ZONING APPEALS AGENDA

Thursday, December 6, 2012

Development Services Building - first floor, Bob Clear Conference Room

CALL TO ORDER – 12:00 P.M. **NOON**

INTRODUCTION / MEETING PROCEDURES

ADMINISTRATION OF OATH TO PERSONS WISHING TO TESTIFY

PUBLIC HEARINGS:

1. Case: 12-701-00010 – Property located at 928 Fairmont Avenue; Control Map 45D, Group J, Parcel 04.00 Requests a variance of 8 feet to [Sect.114-183.(e)(1)(d)] in order to construct a carport in a R-1B Single Family Residential District. The code requires an 8 foot side yard setback.

INTERESTED PARTIES:

Owner: Dot Hatley
928 Fairmont Avenue
Kingsport, TN 37660
(423)246-4738

Applicant /Agent: Tom Hatley
5231 Caintuck Road
Kingsport, TN 37664
(423)343-7678
ethatley@charter.net

Engineer/Architect: Same As Above

2. Case: 12-701-00011 – Property located at 315 Clinchfield St; Control Map 46I, Group A, Parcel 23.00 Requests an variance to [Sect.114-533.(7)(a)(1)(20 and (c)] in order to place a free standing sign and wall signage at this location. The property is located in the B-2, Downtown Business District that allows either type of signage but not both. The petitioners are asking for both types of signs to be located on this parcel and an increase to the allowable square footage of each type of sign.

INTERESTED PARTIES:

Owner: Vanmar Inc Burger King 188020
315 Clinchfield Street
Kingsport, TN 37660
(965)804-6530
brad.nicely@ sycamoresignservice.com

Applicant /Agent: Brad Nicely
Sycamore Sign Service
230 Creek View Lane
Blaine, TN 37709
(865)804-6530 or (865) 932-3455
brad.nicely@ sycamoresignservice.com

Engineer/Architect: Same As Above

BUSINESS:

- Approval of the November 1, 2012 minutes.
- Stating for the public record, the next application deadline December 17, 2012 at noon, and meeting date (Thursday, January 3, 2013).
- Staff Reports
- **Rehearing of Case Number 09-701-00001**

ADJUDICATION OF CASES:

ADJOURNMENT:

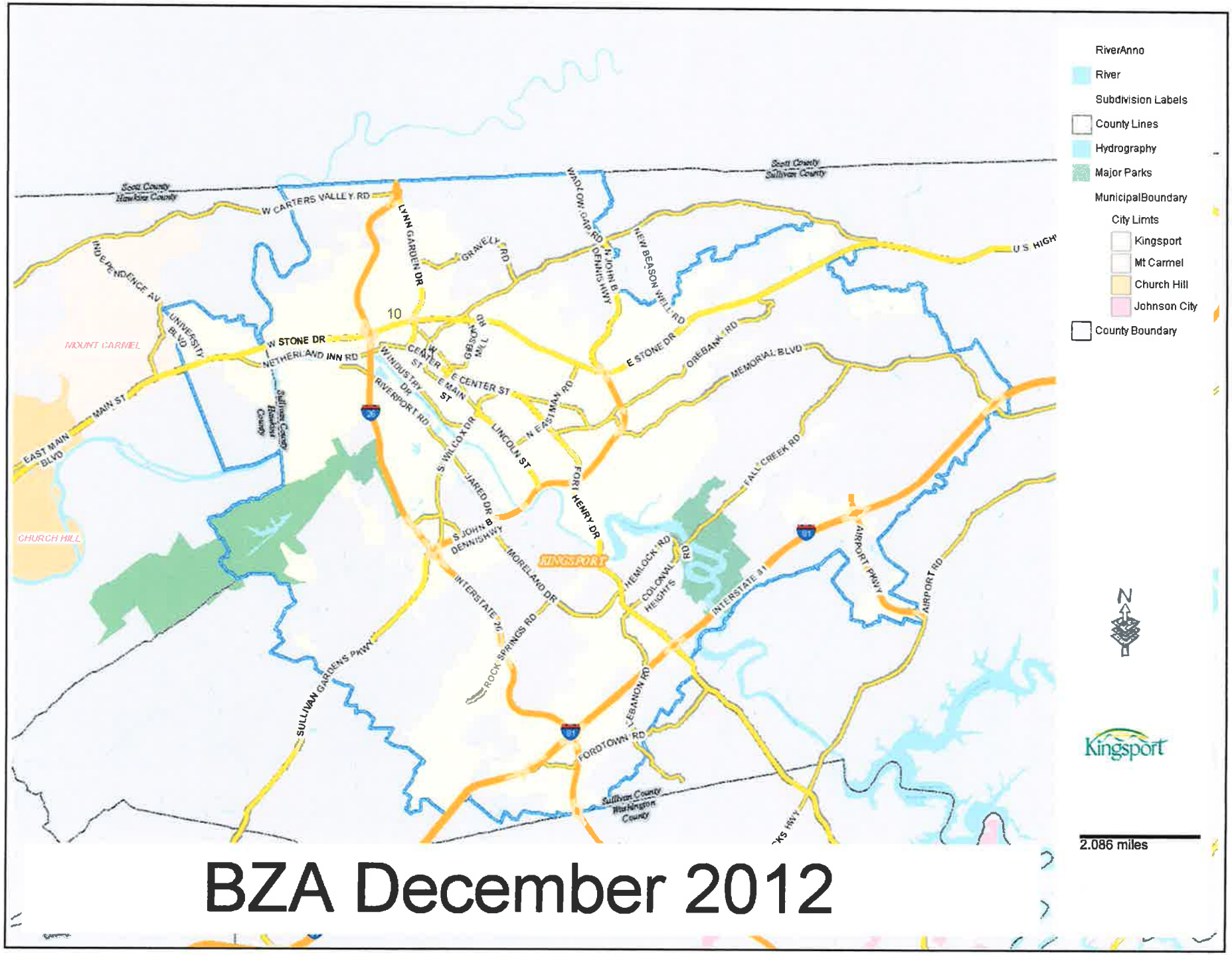

BZA December 2012

MEMORANDUM

TO: KINGSPORT BOARD OF ZONING APPEALS

FROM: Karen B. Combs, PRINCIPAL PLANNER

DATE: November 15, 2012

RE: 928 Fairmont Avenue

The Board is asked to consider the following request:

Case: 12-701-00010 – Property located at 928 Fairmont Avenue; Control Map 45D, Group J, Parcel 4.00

Requests an variance of 8 feet to [Sect.114-183.(e)(1)(d)] in order to construct a carport in a R-1B Single Family Residential District. The code requires an 8 foot side yard setback.

Karencombs@kingsporttn.gov
224-2482

APPLICATION
Board of Zoning Appeals

Kingsport

APPLICANT INFORMATION:

Last Name	HATLEY	First	DOT	M.I.	Date 11-13-12
Street Address	928 FAIRMONT AVE			Apartment/Unit #	
City	KINGSPORT	State	TN	ZIP	37660
Phone	423-246-4738	E-mail Address	N/A		

PROPERTY INFORMATION:

Tax Map Information	Tax map: 45D	Group: J	Parcel: 400	Lot:	
Street Address	928 FAIRMONT AVE.			Apartment/Unit #	
Current Zone	R-1B		Proposed Zone	N/A	
Current Use	Single Family Hous		Proposed Use	Same	

REPRESENTATIVE INFORMATION:

Last Name	HATLEY	First	TOM	M.I.	Date 11-13-12
Street Address	5231 CAINTUCK ROAD			Apartment/Unit #	
City	KINGSPORT	State	TN	ZIP	37664
Phone	423-343-7678	E-mail Address	ethatley@charter.net		

REQUESTED ACTION:

INSTALLATION OF DRIVE UNDER CARPORT. 10'X 18'

DISCLAIMER AND SIGNATURE

By signing below I state that I have read and understand the conditions of this application and have been informed as to the location, date and time of the meeting in which the Board of Zoning Appeals will review my application. I further state that I am/we are the sole and legal owner(s) of the property described herein and that I am/we are appealing to the Board of Zoning Appeals.

Signature: Dorothy Hatley Date: 11/13/2012

Signed before me on this 13th day of November, 2012

a notary public for the State of TN

County of Sullivan

Notary

My Commission Expires 12/29/2014

MICHELLE S. HATLEY
STATE OF TENNESSEE NOTARY PUBLIC
SULLIVAN COUNTY

CITY PLANNING OFFICE

Received Date: 11/15/12

Received By: Tarin Combs

Application Fee Paid: $50.00 - 11/15/12

Board of Zoning Appeals Meeting Date: 12-6-12

Section of Applicable Code: 114-183.(e)(6)

Building/Zoning Administrator Signature: Michael D Trumbo

Date: 11/16/2012

Completed Site Plans Received:

Previous requests or file numbers: N/A

Signature of City Planner:

Date: 11/15/12

928 Fairmont Avenue

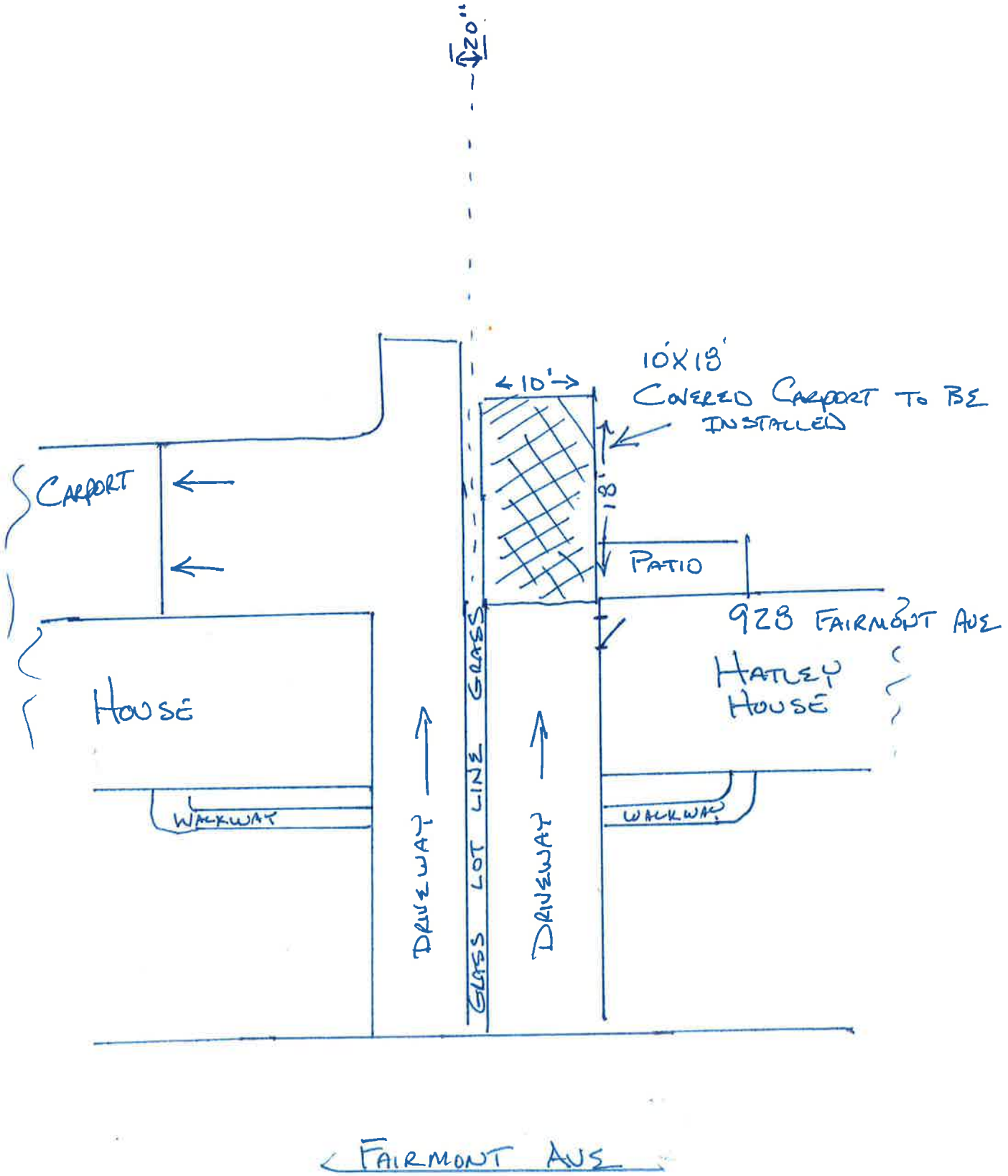

DOT HATLEY
928 FAIRMONT AVE
KPT. TN

AREA CARPORT TO BE INSTALLED

Combs, Karen

From: Tom Hatley [ethatley@charter.net]
Sent: Tuesday, November 13, 2012 4:51 PM
To: Combs, Karen
Subject: Emailing: DSCN2836, DSCN2837, DSCN2838

Ms. Combs,

Attached are photos of adjoining driveways located @ 928 Fairmont Ave. Per installer, 10' X 18' aluminum flat roofed carport to be installed from end of driveway and attach to structure above side entrance door. Completed application, drawing along with check with be dropped of to your office on Wed. afternoon. Thank you for your quick response and help with obtaining information to process with the application.

Sincerely
Tom Hatley
ethatley@charter.net
423-343-7678

Emailing: DSCN2836, DSCN2837, DSCN2838

VIEW SLIDE SHOW DOWNLOAD ALL

This album has 3 photos and will be available on SkyDrive until 2/11/2013.

Your message is ready to be sent with the following file or link attachments:
DSCN2836
DSCN2837
DSCN2838

Note: To protect against computer viruses, e-mail programs may prevent sending or receiving certain types of file attachments. Check your e-mail security settings to determine how attachments are handled.

Variance Worksheet – Finding of Facts for:

Case: 12-701-00010 – Property located at 928 Fairmont Avenue; Control Map 45D, Group J, Parcel 04.00 Requests a variance of 8 feet to [Sect.114-183.(e)(1)(d)] in order to construct a carport in a R-1B Single Family Residential District. The code requires an 8 foot side yard setback.

Variances. Except as provided herein to hear and decide applications for variance from the terms of this chapter, because of exceptional narrowness, shallowness or shape of a specific piece of property which on June 16, 1981, was a lot of record or where, because of exceptional topographic conditions or other extraordinary or exceptional situation or condition of a piece of property, the strict application of this chapter would result in peculiar and exceptional practical difficulties to exception or undue hardship upon the owner of such property, provided that such relief may be granted without substantial detriment to the public good and without substantially impairing the intent and purpose of this chapter. In granting a variance the board may attach thereto such conditions regarding the location, character and other features of the proposed building, structure or use as it may deem advisable in furtherance of the purposes of this chapter. Before any variance is granted, the board must find all of the following, which shall be recorded, along with any imposed conditions or restrictions, in minutes and records and issued in written form to the applicant to constitute proof of the variance:

a. The specific conditions in detail which are unique to the applicant's land. Such hardship is not shared generally by other properties in the same zoning district and the same vicinity.

b. The manner in which the strict application of this chapter would deprive the applicant of a reasonable use of the land.

c. The unique conditions and circumstances are not the result of actions of the applicant taken subsequent to the adoption or amendment of this chapter.

d. Reasons that the variance will preserve, not harm, the public safety and welfare and will not alter the essential character of the neighborhood.

Further, a variance may be granted only if the Board finds that such relief may be granted without substantial detriment to the public good and without substantially impairing the intent and purpose of the zoning plan and this chapter. Variances shall not be granted permitting an increase in floor area or density above the maximum permitted by the zoning district; allowing a use other than those specifically authorized by this chapter in the applicable zoning district; or from the denial of a zoning permit when such denial is due to the fact that such lot has no frontage on a public street unless such lot was a lot of record on June 16, 1981.

Hardship - There is no definition of a "hardship". Some guidelines, based on legal precedent, for applying the concept of unnecessary hardship are:

1. The premises of cannot be used in a manner permitted by the Zoning Ordinance unless the variance is granted.

2. A strict application of the terms of the Zoning Ordinance precludes its use for any purpose to which the land is reasonably adopted.

3. Inability to put the property to its most profitable use DOES NOT constitute a "hardship".

4. Mere inconvenience to the applicant is not sufficient grounds for determining a "hardship". In granting a variance the BZA may not make any decision that is contrary to the purpose and intent of the Zoning Ordinance.

MEMORANDUM

TO: KINGSPORT BOARD OF ZONING APPEALS

FROM: Karen B. Combs, PRINCIPAL PLANNER

DATE: November 15, 2012

RE: 315 Clinchfield Street

The Board is asked to consider the following request:

Case: 12-701-00011 – Property located at 315 Clinchfield St; Control Map 46I, Group A, Parcel 23.00

Requests an variance to [Sect.114-533.(7)(a)(1)(20 and (c)] in order to place a free standing sign and wall signage at this location. The property is located in the B-2, Downtown Business District that allows either type of signage but not both. The petitioners are asking for both types of signs to be located on this parcel and an increase to the allowable square footage of each type of sign.

APPLICATION
Board of Zoning Appeals

Kingsport

APPLICANT INFORMATION:

Last Name Vanmar, Inc Burger First King (183080) M.I. Date 11-14-12

Street Address 315 Clinchfield St Apartment/Unit #

City Kingsport State TN ZIP 37660

Phone 865-804-6530 E-mail Address brad.nicely@sycamoresignservice.com

PROPERTY INFORMATION:

Tax Map Information Tax map: 46I Group: A Parcel 23 Lot:

Street Address 315 Clinchfield St, Kingsport, TN Apartment/Unit #

Current Zone B2 Proposed Zone B2

Current Use ~~restaurant~~ Vacant Proposed Use restuarant

REPRESENTATIVE INFORMATION:

Last Name Nicely First Brad M.I. Date 11-14-12

Street Address Sycamore Sign Service 230 Creek View Lane Apartment/Unit #

City Blaine State TN ZIP 37709

Phone 865-804-6530 E-mail Address brad.nicely@sycamoresignservice.com

865-932-3455

REQUESTED ACTION:

We are requesting that the Pylon be approved at 51 sq ft as opposed to the allowed 50 sq ft. and that we allowed to have 3 wall signs comparable to those of the competitors in the area. Please see attached.

DISCLAIMER AND SIGNATURE

By signing below I state that I have read and understand the conditions of this application and have been informed as to the location, date and time of the meeting in which the Board of Zoning Appeals will review my application. I further state that I am/we are the sole and legal owner(s) of the property described herein and that I am/we are appealing to the Board of Zoning Appeals.

Signature: Brad Sand for Sycamore Sign Service Date: 11-14-12

Signed before me on this 14th day of November 2012

a notary public for the State of Tennessee

County of Grainger

Notary

My Commission Expires 12/16/12

CYNTHIA S. MONDAK
STATE OF TENNESSEE NOTARY PUBLIC
GRAINGER COUNTY

CITY PLANNING OFFICE

Received Date: Received By:

Application Fee Paid:

Board of Zoning Appeals Meeting Date:

Section of Applicable Code: 114-533(7)(a)(1)(2)(B)

Building/Zoning Administrator Signature: Michael Fenn Date: 11/16/2011

Completed Site Plans Received:

Previous requests or file numbers:

Signature of
City Planner: Date:

November 14, 2012

City of Kingsport
Board of Zoning Appeals
201W. Market Street
Kingsport, Tennessee 37760

RE: Application for Appeal

To Whom It May Concern:

Attached please find our Application for Appeal as well as our supporting documentation. We are applying for this appeal on behalf of our customer Burger King, a fast food restaurant with a drive thru. This type of establishment needs a reader board and wall signs, which leads to the overage in square footage. As you can see by the attached documentation the wall sign would be facing the often used alley way on the side of the building. We are only requesting a variance that would allow our signs to be permitted so that the Burger King location would have comparable signage to that of its competitors already in the area with similar type and number of signs.

If you have any questions, or would like additional information, please feel free to contact us.

Sincerely,

April Ford
Sycamore Sign Service

Enclosures

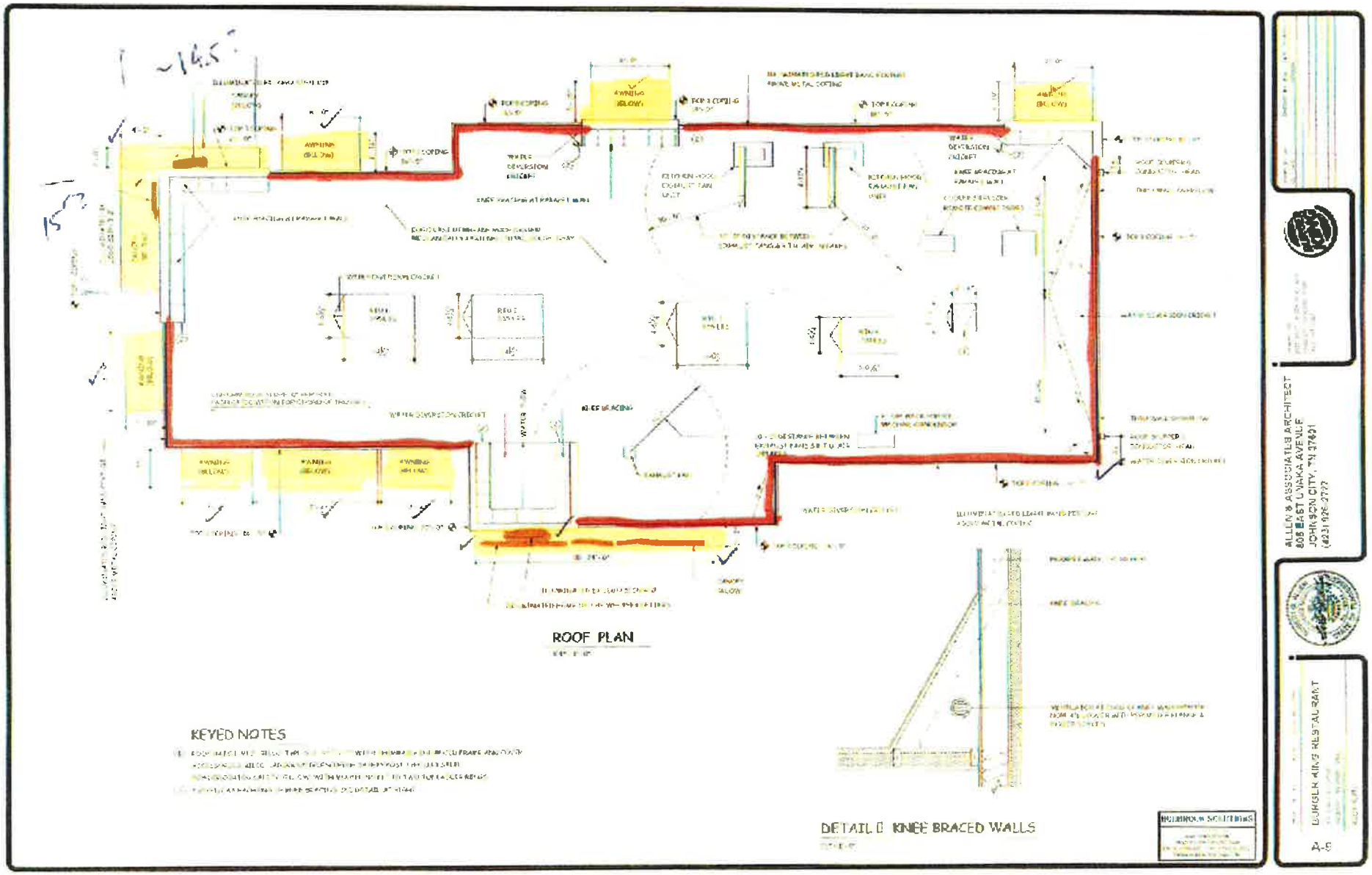
~14.5'
15'
ROOF PLAN
KEYED NOTES
DETAIL D KNEE BRACED WALLS
ALLEN & ASSOCIATES ARCHITECT
808 EAST UNAKA AVENUE
JOHNSON CITY, TN 37601
BURGER KING RESTAURANT
A-5

33

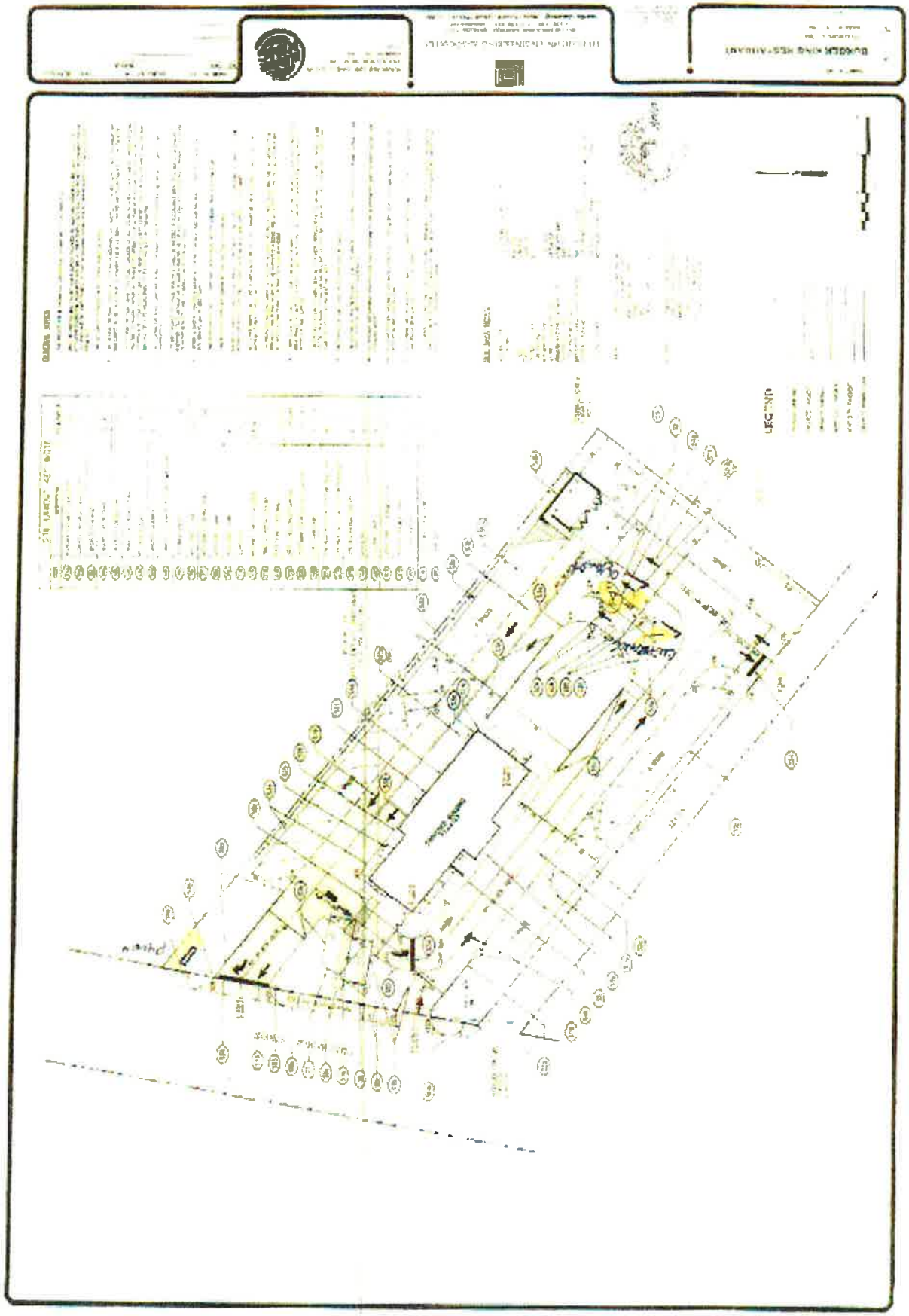

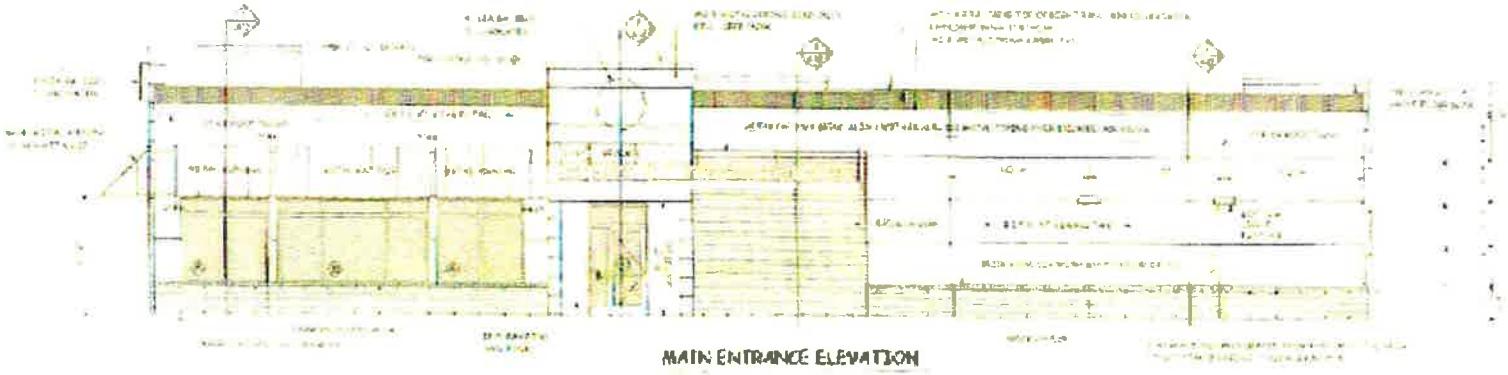

MAIN ENTRANCE ELEVATION

DRIVE THRU ELEVATION

DETAIL @ MTL COPING OVER BRICK

ALLEN & ASSOCIATES ARCHITECT
008 EAST UNAKA AVENUE
JOHNSON CITY, TN 37601

A 3

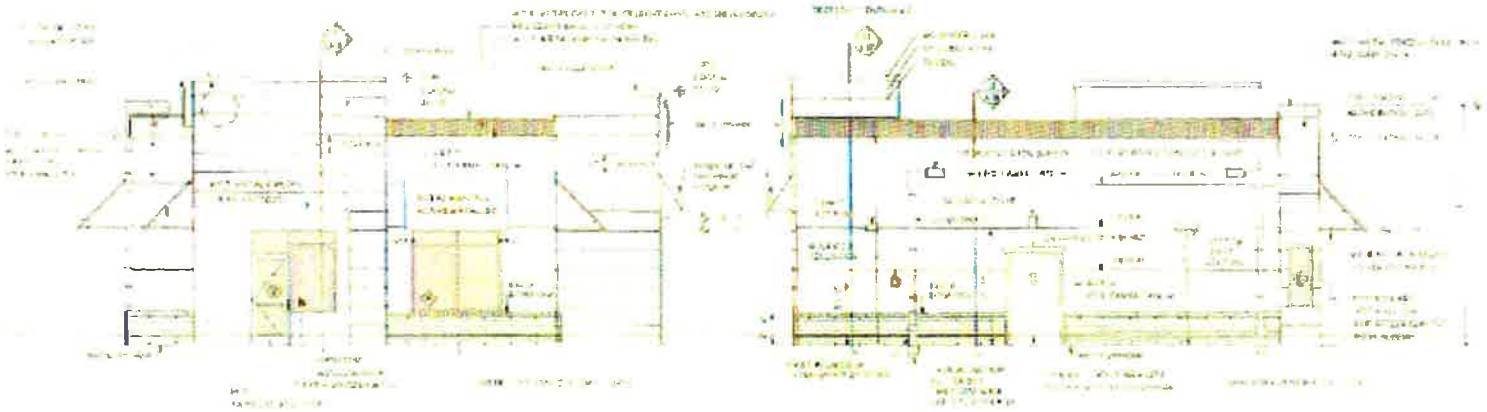

FRONT ELEVATION

REAR ELEVATION

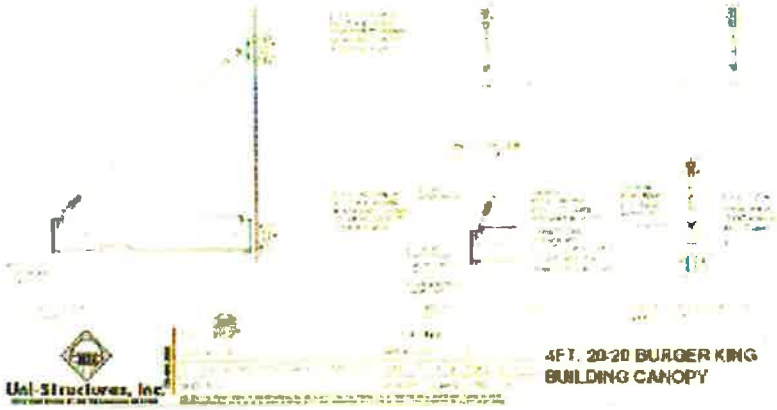

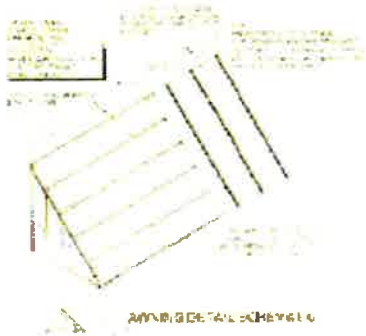

Uni-Structures, Inc

4FT. 20-20 BURGER KING
BUILDING CANOPY

CHANNEL LETTER SET

SPECIFICATIONS

- Faces to be .125 2793 White Acrylic with Silver Jay Night vinyl 3M 3635-0456.
- Returns to be painted brushed aluminum with clear coat
- Trim Cap: 1" Silver Jewelite to match returns
- White LED Illumination
- Raceway to be painted brushed aluminum with clear coat

ELECTRICAL

Total Amps: 9
Total Circuits: (1) 20 amp
Volts: 120

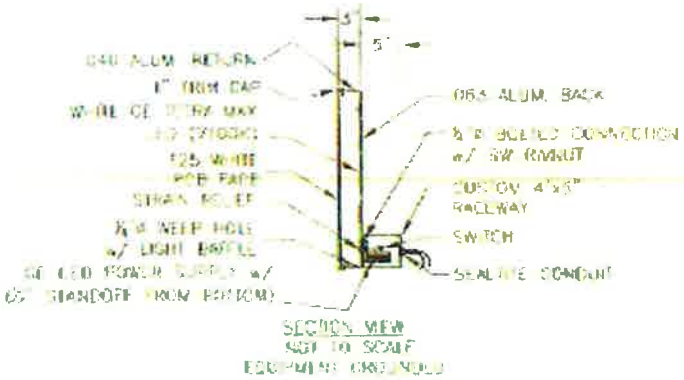

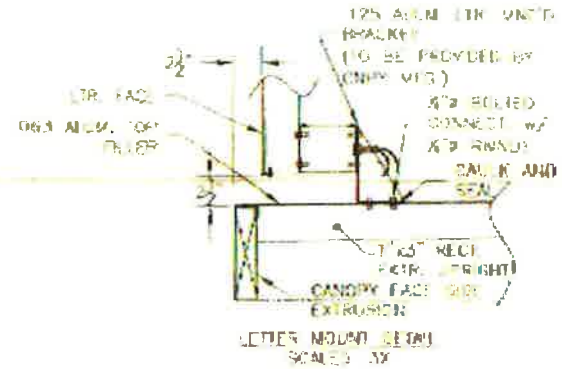

PART # 115-CL14-HOTW-SLVDN

CUMMINS

BURGER KING

DRAWING NO:
681948

SINGLE FACE WALL SIGN

1. 3M White Diffuser #3635-30 - Second Surface
2. 3M Translucent Vinyl #3630-33 Red (PMS 485C) - Second Surface
3. 3M Translucent Vinyl #3630-126 Yellow (PMS 1235C) - Second Surface
4. 3M Translucent Vinyl #3630-8703 Blue (PMS274C) - Second Surface
5. Retain Color - Natural Matte Aluminum Finish
6. Retainer - Paint to Match Matte Aluminum Finish

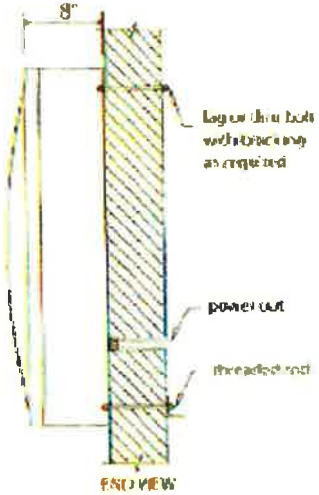

END VIEW

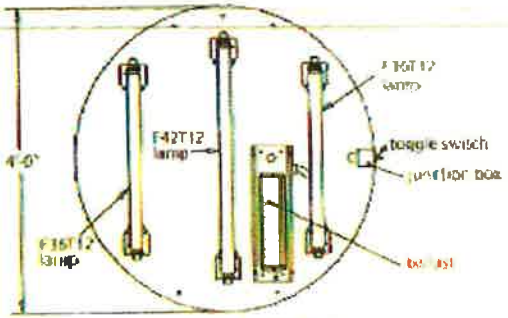

ASSEMBLY/LAMP LAYOUT

SPECIFICATIONS

- Clear polycarbonate faces with translucent vinyl applied second surface and dish formed.
- Fabricated aluminum cabinet painted.
- Aluminum extrusion retainer painted.
- Internally illuminated with Fluorescent lamps.
- Exterior wall mount.

ELECTRICAL

Total Amps: 1.10
Total Circuits: (1) 20 amp
Volts: 120

16 SQ. FT.

PART # 116-WS-4-LOGO-FL

CUMMINGS

BURGER KING

DRAWING NO: 67978 C

SINGLE FACE WALL SIGN

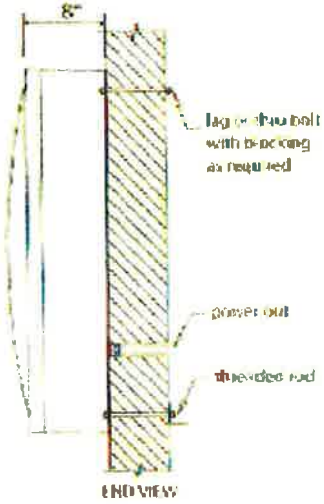

END VIEW

SPECIFICATIONS

- Clear polycarbonate faces with translucent vinyl applied second surface and dish formed.
- Fabricated aluminum cabinet painted.
- Aluminum extrusion retainer painted.
- Internally illuminated with Fluorescent lamps.
- Exterior wall mount.

ELECTRICAL
Total Amps: 1.10
Total Circuits: (1) 20 amp
Volts: 120

9 SQ. FT.

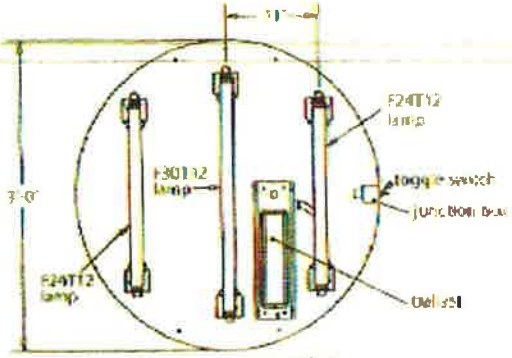

ASSEMBLY LAYOUT

PART # 116-WS-3-LOGO-FL

CUMMINGS

BURGER KING

DRAWING NO.
67978 B

DOUBLE FACE 20/20 PYLON SIGN

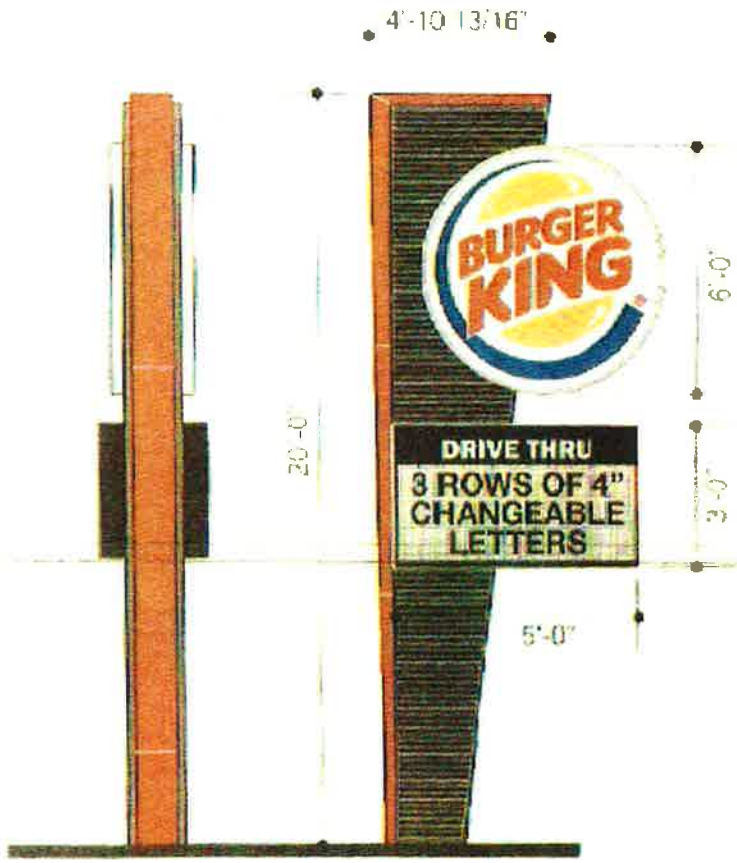

SPECIFICATIONS

- Formed polycarbonate faces with translucent vinyl applied second surface.
- Fabricated aluminum cabinet painted brush aluminum silver.
- Internally illuminated with LED's.
- Cladding painted black - satin finish.
- (2) single face readerboard cabinets with 3 lines of 4 inch black changeable copy.
- Readerboard cabinets painted black - satin finish. Illuminated reveal: 125 red polycarbonate.

ELECTRICAL

Total Amps: 5.40
Total Circuits: (1) 20 amp
Volts: 120

LOGO FACE COLORS

3M White Diffuser #3635-20 - Second Surface
3M Translucent Vinyl #3630-33 Red (PMS 485C) - Second Surface
3M Translucent Vinyl #3630-125 Yellow (PMS 1235C) - Second Surface
3M Translucent Vinyl #3630-5700 Blue (PMS 2746C) - Second Surface

116-DF-20FT-LED

CUMMINGS

BURGER KING

DRAWING NO
67978 P2.1

BL
KINGSPORT, TN

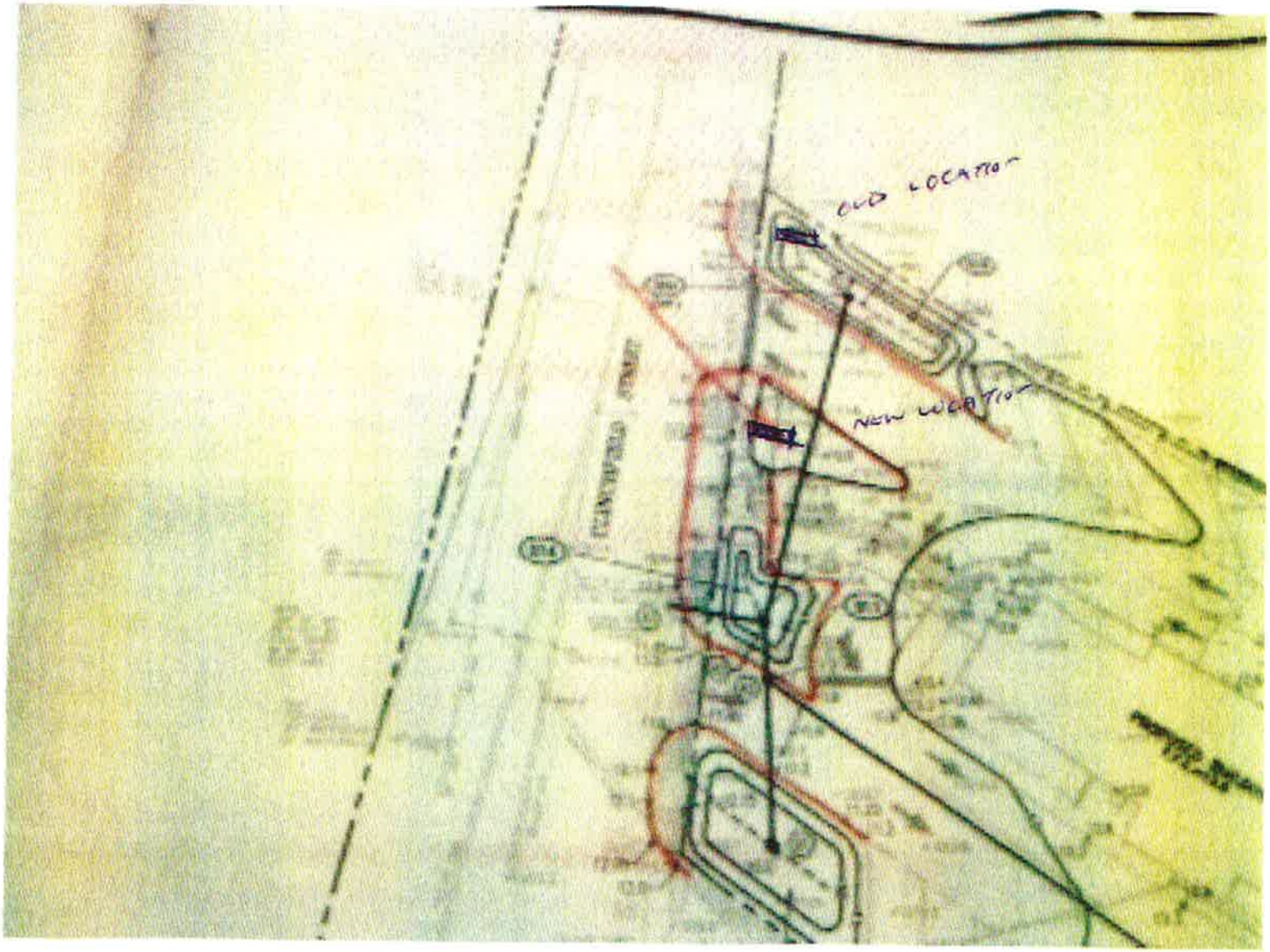

61 ☒ wall
51 ☒ pylon

Kingsport

Application for Sign Permit
Building Department

201 W Market Street
Kingsport, TN 37660
Tel: 423-229-9393
Fax: 423-224-2680

BUSINESS NAME: Burger King # 188020

BUSINESS ADDRESS: 315 Clinchfield St, Kingsport, TN 37660

SIGN CONTRACTOR: Sycamore Sign Service

FREE-STANDING

Clearance bar — Size: 9' x 8' = NO COPY SqFt Height: 9' Illuminated: N/A

Sign Material: Plastic (Metal) (Vinyl) Other: _____

UL# _____

WALL

Channel set — Size: 14" x 23'-6" = 27.42 SqFt Height: 14" Illuminated: white led

Sign Material: Plastic (Metal) (Vinyl) Other: _____

4' wall — Size: 4' x 4' = 16 SqFt Height: 4' Illuminated: internal Flourescent

Sign Material: (Plastic) Metal (Vinyl) Other: _____

3' wall — Size: 3' x 3' = 9 SqFt Height: 3' Illuminated: internal Flourescen

Sign Material: (Plastic) Metal (Vinyl) Other: _____

UL# _____

BEFORE SIGN PERMIT CAN BE APPROVED YOU MUST SUBMIT:
FREESTANDING: SITE PLAN SHOWING PROPOSED LOCATION; FOOTING DETAIL; EXISTING SIGNAGE
WALL: DRAWING OF PROPOSED SIGN DESIGN; LOCATION ON STRUCTURE; EXISTING SIGNAGE

Application for Sign Permit
Building Department

201 W Market Street
Kingsport, TN 37660
Tel: 423-229-9393
Fax: 423-224-2680

BUSINESS NAME: Burger King # 188020

BUSINESS ADDRESS: 315 Clinchfield St, Kingsport, TN 37660

SIGN CONTRACTOR: Sycamore Sign Service

FREE-STANDING

reader board Size: 3' X 5' = 15 SqFt Height: 3' Illuminated: internal led

Sign Material: (Plastic) (Metal) (Vinyl) Other:_____

UL#_____

WALL

Size: _____ X _____ = _____ SqFt Height:_____ Illuminated:_____

Sign Material: Plastic Metal Vinyl Other:_____

Size: _____ X _____ = _____ SqFt Height:_____ Illuminated:_____

Sign Material: Plastic Metal Vinyl Other:_____

Size: _____ X _____ = _____ SqFt Height:_____ Illuminated:_____

Sign Material: Plastic Metal Vinyl Other:_____

UL#_____

BEFORE SIGN PERMIT CAN BE APPROVED YOU MUST SUBMIT:
FREESTANDING: SITE PLAN SHOWING PROPOSED LOCATION; FOOTING DETAIL; EXISTING SIGNAGE
WALL: DRAWING OF PROPOSED SIGN DESIGN; LOCATION ON STRUCTURE; EXISTING SIGNAGE

Application for Sign Permit
Building Department

201 W Market Street
Kingsport, TN 37660
Tel: 423-229-9393
Fax: 423-224-2680

BUSINESS NAME: Burger King # 188020

BUSINESS ADDRESS: 315 Clinchfield St, Kingsport, TN 37660

SIGN CONTRACTOR: Sycamore Sign Service

FREE-STANDING

Pylon Size: 6' X 6' = 36 SqFt Height: 6' Illuminated: internal led

Sign Material: (Plastic) (Metal) (Vinyl) Other:_____

UL#_____

WALL

Size: _____ X _____ = _____ SqFt Height:_____ Illuminated:_____

Sign Material: Plastic Metal Vinyl Other:_____

Size: _____ X _____ = _____ SqFt Height:_____ Illuminated:_____

Sign Material: Plastic Metal Vinyl Other:_____

Size: _____ X _____ = _____ SqFt Height:_____ Illuminated:_____

Sign Material: Plastic Metal Vinyl Other:_____

UL#_____

BEFORE SIGN PERMIT CAN BE APPROVED YOU MUST SUBMIT:
FREESTANDING: SITE PLAN SHOWING PROPOSED LOCATION; FOOTING DETAIL; EXISTING SIGNAGE
WALL: DRAWING OF PROPOSED SIGN DESIGN; LOCATION ON STRUCTURE; EXISTING SIGNAGE

Application for Sign Permit
Building Department

201 W Market Street
Kingsport, TN 37660
Tel: 423-229-9393
Fax: 423-224-2680

BUSINESS NAME: Burger King # 188020

BUSINESS ADDRESS: 315 Clinchfield St, Kingsport, TN 37660

SIGN CONTRACTOR: Sycamore Sign Service

FREE-STANDING

OCU Canopy

Size: 10' X 3'8½" = NO COPY SqFt Height: 10' Illuminated: N/A

Sign Material: Plastic (Metal) (Vinyl) Other: _____

UL# _____

WALL

Size: _____ X _____ = _____ SqFt Height: _____ Illuminated: _____

Sign Material: Plastic Metal Vinyl Other: _____

Size: _____ X _____ = _____ SqFt Height: _____ Illuminated: _____

Sign Material: Plastic Metal Vinyl Other: _____

Size: _____ X _____ = _____ SqFt Height: _____ Illuminated: _____

Sign Material: Plastic Metal Vinyl Other: _____

UL# _____

BEFORE SIGN PERMIT CAN BE APPROVED YOU MUST SUBMIT:
FREESTANDING: SITE PLAN SHOWING PROPOSED LOCATION; FOOTING DETAIL; EXISTING SIGNAGE
WALL: DRAWING OF PROPOSED SIGN DESIGN; LOCATION ON STRUCTURE; EXISTING SIGNAGE

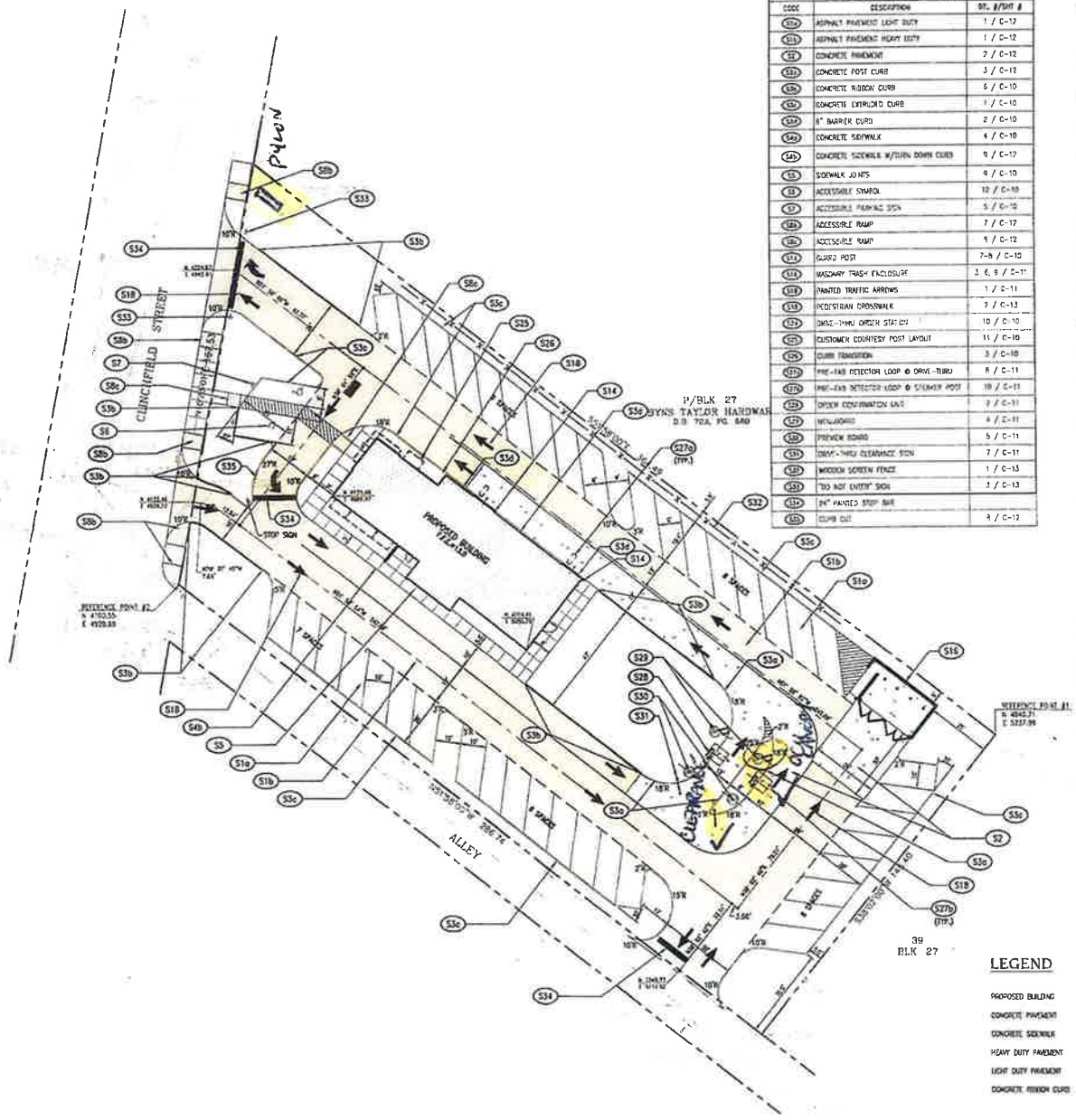

SITE LAYOUT KEY NOTE

CODE	DESCRIPTION	DET. #/SHT #
S1a	ASPHALT PAVEMENT LIGHT DUTY	1 / C-12
S1b	ASPHALT PAVEMENT HEAVY DUTY	1 / C-12
S2	CONCRETE PAVEMENT	2 / C-12
S3a	CONCRETE POST CURB	3 / C-12
S3b	CONCRETE RIBBON CURB	6 / C-10
S3c	CONCRETE EXTRUDED CURB	1 / C-10
S3d	8" BARRIER CURB	2 / C-10
S4a	CONCRETE SIDEWALK	4 / C-10
S4b	CONCRETE SIDEWALK W/TURN DOWN CURB	9 / C-12
S5	SIDEWALK JOINTS	9 / C-10
S6	ACCESSIBLE SYMBOL	12 / C-10
S7	ACCESSIBLE PARKING SIGN	5 / C-10
S8a	ACCESSIBLE RAMP	7 / C-12
S8c	ACCESSIBLE RAMP	9 / C-12
S9a	GUARD POST	7-8 / C-10
S10a	MASONRY TRASH ENCLOSURE	3, 6, 9 / C-11
S11a	PAINTED TRAFFIC ARROWS	1 / C-11
S11b	PEDESTRIAN CROSSWALK	7 / C-13
S12a	DRIVE-THRU ORDER STATION	10 / C-10
S12b	CUSTOMER COURTESY POST LAYOUT	11 / C-10
S13a	CURB TRANSITION	3 / C-10
S13b	PRE-FAB DETECTOR LOOP @ DRIVE-THRU	8 / C-11
S13c	PRE-FAB DETECTOR LOOP @ SPEAKER POST	10 / C-11
S13d	ORDER CONFIRMATION SIGN	9 / C-11
S13e	WELLHOUSE	4 / C-11
S13f	PREVIEW BOARD	5 / C-11
S13g	DRIVE-THRU CLEARANCE SIGN	7 / C-11
S13h	WOODEN SCREEN FENCE	1 / C-13
S13i	"DO NOT ENTER" SIGN	3 / C-13
S14a	24" PAINTED STOP BAR	
S15a	CURB CUT	3 / C-12

GENERAL NOTES

1. THE PROJECT SITE IS SHOWN ON JURISDICTION TAX MAP 46-J-A AS PARCEL 23.
2. BASE INFORMATION WAS TAKEN FROM A SURVEY PREPARED BY ALLEY AND ASSOCIATES, INC. DATED 10-24-2011. LITTLEJOHN ENGINEERING ASSOCIATES AND ANY OF THEIR CONSULTANTS SHALL NOT BE HELD RESPONSIBLE FOR THE ACCURACY AND/OR COMPLETENESS OF THAT INFORMATION SHOWN HEREON OR ANY ERRORS OR OMISSIONS RESULTING FROM SUCH.
3. THE SITE LAYOUT IS BASED ON REFERENCE POINTS AS NOTED.
4. THE CONTRACTOR SHALL CHECK ALL EXISTING CONDITIONS, (i.e. INVERTS, UTILITY ROUTINGS, UTILITY CROSSINGS, AND DIMENSIONS) IN THE FIELD PRIOR TO COMMENCEMENT OF WORK. REPORT ANY DISCREPANCIES TO THE ENGINEER.
5. THE CONTRACTOR SHALL VERIFY THE EXACT LOCATION OF ALL EXISTING UTILITIES. TAKE CARE TO PROTECT UTILITIES THAT ARE TO REMAIN. REPAIR ANY DAMAGE ACCORDING TO LOCAL STANDARDS AND AT NO EXPENSE TO THE OWNER. COORDINATE ALL CONSTRUCTION WITH THE APPROPRIATE UTILITY COMPANY. THE CONTRACTOR SHALL CALL NATIONAL ONE CALL (811) 72 HOURS PRIOR TO PROCEEDING WITH ANY EXCAVATION.
6. THE CONTRACTOR SHALL COORDINATE TO ALL LOCAL CODES AND RECEIVE APPROVAL WHERE NECESSARY BEFORE CONSTRUCTION.
7. EXISTING PAVEMENT OF PUBLIC ROADWAYS SHALL BE PATCHED IN ACCORDANCE WITH LOCAL AGENCY STANDARDS WHENEVER UTILITY INSTALLATION REQUIRES REMOVAL OF THE EXISTING PAVEMENT. COORDINATE PAVEMENT REMOVING LOCATIONS WITH SITE CIVIL, PLUMBING AND ELECTRICAL PLANS.
8. PROVIDE A SMOOTH TRANSITION BETWEEN EXISTING PAVEMENT AND NEW PAVEMENT. SLIGHT FIELD ADJUSTMENT OF FINAL GRADES MAY BE NECESSARY.
9. DIMENSIONS ARE TO FACE OF CURB AND/OR EXTERIOR FACE OF BUILDING UNLESS OTHERWISE NOTED.
10. CONCRETE FOR CURBS AND SIDEWALKS SHALL BE 3000 PSI CONCRETE.
11. ANY WORK UNACCEPTABLE TO THE OWNER'S REPRESENTATIVE OR TO THE LOCAL GOVERNING AUTHORITY SHALL BE REPAIRED OR REPLACED BY THE CONTRACTOR AT NO ADDITIONAL EXPENSE TO THE OWNER.
12. ACCESSIBLE RAMPS SHALL HAVE A MAXIMUM SLOPE OF 1:12. GRADES WITHIN ACCESSIBLE SPACES SHALL BE MAXIMUM 2% IN ALL DIRECTIONS.
13. THE PROPOSED BUILDING SHALL BE LAID OUT USING REFERENCE POINTS AS SHOWN AND THE ARCHITECTURAL DRAWINGS. DIMENSIONS SHOWN TO THE PROPOSED BUILDING ARE CALCULATED TO THE FACE OF EXTERIOR WALL. SEE ARCHITECTURAL PLANS FOR EXACT BUILDING DIMENSIONS.
14. CURBS SHALL BE PARALLEL TO THE CENTERLINE OF DRIVES. THE CURB SHALL BE PLACED ONLY AFTER HAVING ALL BREAK POINTS (PC & PT OF CURVES) LOCATED AT THE FACE OF CURB OR AT A CONSISTENT OFFSET BY A REGISTERED LAND SURVEYOR.
15. THE CONTRACTOR SHALL COMPLY WITH ALL PERTINENT PROVISIONS OF THE MANUAL OF ACCIDENT PREVENTION AND CONSTRUCTION ISSUED BY AGC OF AMERICA, INC. AND THE SAFETY AND HEALTH REGULATIONS OF CONSTRUCTION ISSUED BY THE U.S. DEPARTMENT OF LABOR.
16. THE CONTRACTOR SHALL PAVE IN THE DIRECTION OF TRAFFIC.
17. THE CONTRACTOR WILL BE REQUIRED TO ADJUST GRADES OF INTERSECTING STREETS, ALLEYS, PUBLIC ENTRANCES AND PRIVATE DRIVES AS DIRECTED BY THE ENGINEER.
18. ALL ROADWAY AND SIDEWALK CONSTRUCTION SHALL CONFORM TO THE REQUIREMENTS AND SPECIFICATIONS OF LOCAL GOVERNING AGENCY.
19. ALL CONSTRUCTION MATERIALS AND INSTALLATION SHALL CONFORM TO LOCAL GOVERNING AGENCY AND STATE DOT REGULATIONS AND SPECIFICATIONS.
20. ALL CURBING WILL BE RETURNED TO ABUT TO THE CURBS OF INTERSECTING STREETS, ALLEYS, PUBLIC ENTRANCES, AND PRIVATE DRIVES AS DIRECTED BY THE ENGINEER.
21. THE CONTRACTOR SHALL COMPLY WITH ALL PERTINENT PROVISIONS OF THE MANUAL OF ACCIDENT PREVENTION AND CONSTRUCTION ISSUED BY AGC OF AMERICA, INC. AND THE SAFETY AND HEALTH REGULATIONS OF CONSTRUCTION ISSUED BY THE U.S. DEPARTMENT OF LABOR.

SITE DATA NOTES:

MAP AND PARCEL	TAX MAP 46-J "A" PARCEL 23
SITE ADDRESS	315 CLINCHFIELD STREET
CITY	KINGSPORT
COUNTY:	SULLIVAN
STATE:	TENNESSEE
PROPERTY ZONING:	C-2
OVL DISTRICT:	NTH
ACREAGE OF SITE:	1.103 ACRES
SQUARE FOOTAGE OF SITE:	48,309 S.F.
MINIMUM REQUIRED SETBACK LINES:	NONE APPLICABLE
PROPOSED BLD SQ FT:	3452 S.F.
FLOOR AREA RATIO OF SITE:	0.07
IMPERVIOUS SURFACE AREA PROVIDED:	74% (35,716 Sq. Ft.)
REQUIRED PARKING:	1SP PER FOUR SEATS PLUS 1SP PER TWO EMPLOYEES= (65 SEATS/4) + (10 EMPLOYEES/2) = 25 SPACES
PROPOSED PARKING:	42 SPACES (2 ACCESS SLE)

OWNER: BURGER KING CORPORATION
2505 SOUTH WILCOX DRIVE, SUITE 1
KINGSPORT, TN 37660
PHONE:
FAX:
CONTACT: DUKE CLAYTON

APPLICANT: LITTLEJOHN ENGINEERING ASSOCIATES
1935 21ST AVENUE SOUTH
NASHVILLE, TN 37212
PHONE: (615) 385-4144
FAX: (615) 385-4020
CONTACT: PHILLIP PURCY

LEGEND

- PROPOSED BUILDING
- CONCRETE PAVEMENT
- CONCRETE SIDEWALK
- HEAVY DUTY PAVEMENT
- LIGHT DUTY PAVEMENT
- CONCRETE RIBBON CURB

GRAPHIC SCALE

BURGER KING CORP. (DUKE A. CLAYTON)
2505 SOUTH WILCOX DR., STE 1
KINGSPORT, TN 37660
PHONE:

LITTLEJOHN ENGINEERING ASSOCIATES
1935 21st Avenue South, NASHVILLE, TENNESSEE 37212
(615) 385-4144 FAX (615) 385-4020
Nashville | Chattanooga | Decatur | Knoxville | Orlando | Phoenix | Tri-Cities

DRAWN BY	CHECKED BY	DATE
	PP	04/19/2012

NO.	DATE	REVISION

PROJECT # A2373

BURGER KING RESTAURANT
315 CLINCHFIELD STREET
KINGSPORT, TN 37660

SURVEYOR'S CERTIFICATE
AS PER TCA 66-5-207
AND TSBPELS RULE 0820-3-.13

Site PLAN

C-7

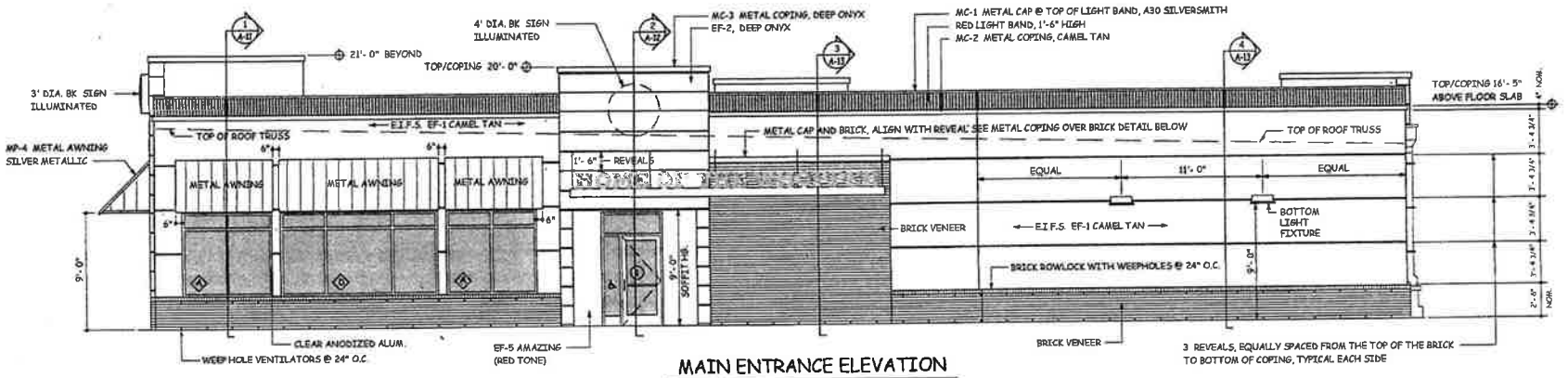

MAIN ENTRANCE ELEVATION

1/4" = 1'- 0"

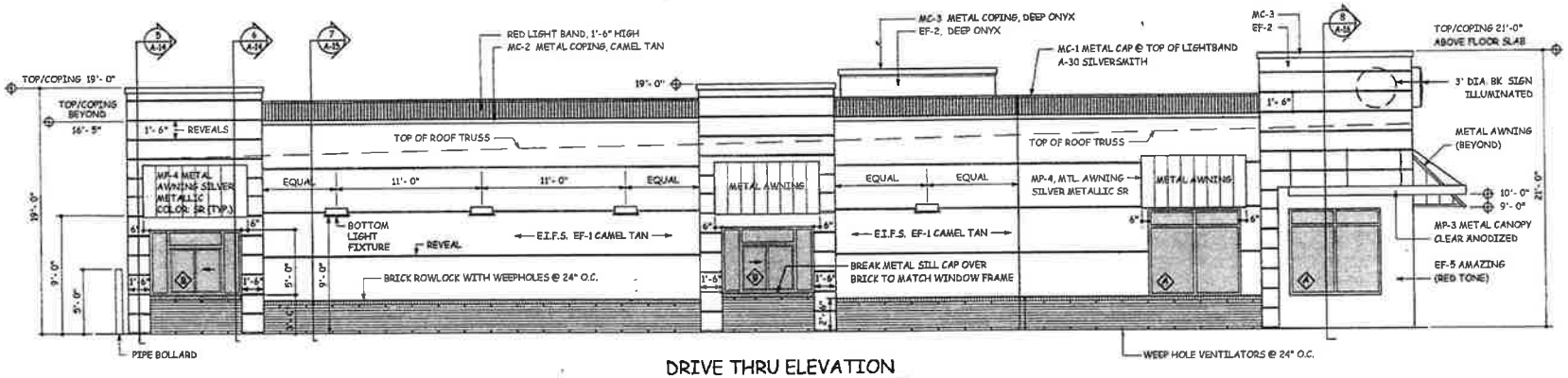

DRIVE THRU ELEVATION

1/4" = 1'- 0"

GENERAL NOTES

E.I.F.S. EXTERIOR INSULATION FINISH SYSTEM TO BE DRYVIT COMD SYSTEM 7, UTILIZING 2" THICK DRYVIT INSULATION BOARD, APPLIED OVER TYVEK STUCCO WRAP MEMBRANE, FASTENED 8" O.C. EACH WAY. DRYVIT MESH BASE COAT UTILIZING DRYVIT MEDALLION SERIES FINISH COAT WITH A SAND PEBBLE FINISH

E.I.F.S. TO BE BASE MIXED WITH COLOR ADDITIVE THEN CURED UPON FULLY CURED BE PAINTED COAT(S) TO MATCH THE TRUE COLOR HUES OF EF-1 CAMEL TAN EF-2 DEEP ONYX & EF-5 AMAZING

BUILDING SIGNAGE

14" HGHT. HOME OF THE WHOPPER LETTERS	27.40 SF
4'-8" BK LOGO @ MAIN ENTRANCE	17.36 SF
3'-0" BK LOGO @ DRIVE THRU	7.06 SF
4'-8" BK LOGO @ FRONT	7.06 ST
	SUMMATION 54.08 SF

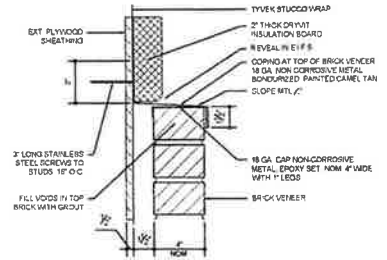

DETAIL @ MTL. COPING OVER BRICK

3" = 1'- 0"

HOLBROOK SOLUTIONS
JAMES HOLBROOK
JAMES@HOLBROOKCAD.COM
PH 423-646-4422 FAX 423-926-0330
WWW.HOLBROOKCAD.COM

ALLEN & ASSOCIATES ARCHITECT
805 EAST UNAKA AVENUE
JOHNSON CITY, TN 37601
(423) 926-2727

YAMAN, INC.
3205 KODAK PLACE DRIVE, SUITE 1
KINGSPORT, TENNESSEE 37660
(423) 343-9070

BURGER KING RESTAURANT
316 DUNGAN STREET
KINGSPORT, TENNESSEE 37660

EXTERIOR ELEVATIONS

A-3

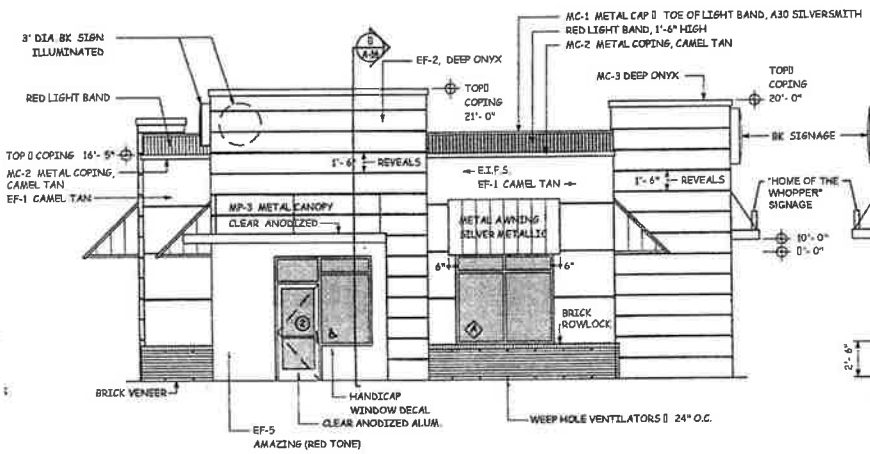

FRONT ELEVATION

104" = 1'- 0"

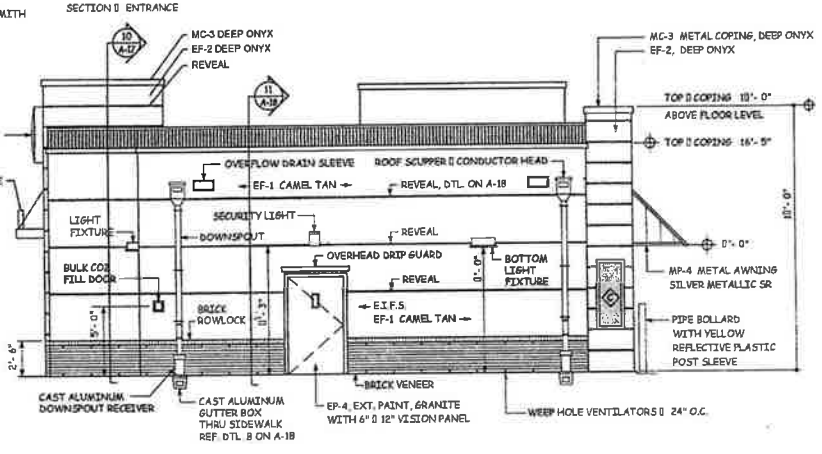

REAR ELEVATION

104" = 1'- 0"

NOTE: POSITION THE ROOF OVERFLOW DRAINS WHERE THE BOTTOM THE OPENING IS ½" ABOVE THE OPENING INTO THE ROOF SCUPPERS

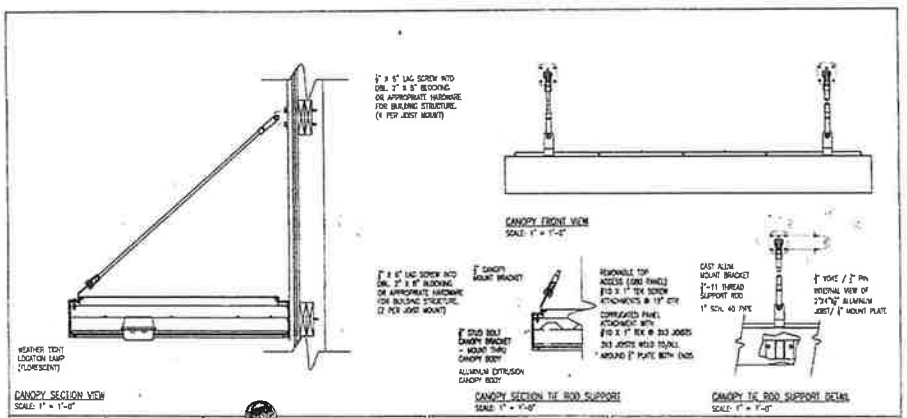

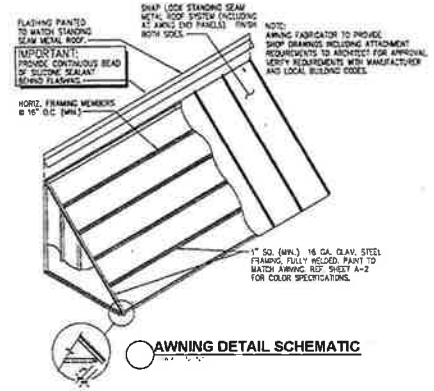

AWNING DETAIL SCHEMATIC

Uni-Structures, Inc.

CLIENT:	STORE #: ####	
LOCATION: N/A	DWG #: 4969	
FILE LOCATION: DWG\UST\BURGER KING\JOBS 2010	SCALE: 1" = 1'-0"	DATE: 07-16-10
SALES: N/A	DESIGNER: C.J. MAYS	PAGE 3 OF 3

4FT. 20/20 BURGER KING BUILDING CANOPY

HOLBROOK SOLUTIONS

JAMES HOLBROOK
JIM@HOLBROOKCAD.COM
PH 423-946-6853 FAX 423-905-0332
WWW.HOLBROOKCAD.COM

ALLEN & ASSOCIATES ARCHITECT
805 EAST UNAKA AVENUE
JOHNSON CITY, TN 37601
(423) 926-2727

VANMAR, INC.
2503 SOUTH WILCOX DRIVE, SUITE 1
KINGSPORT, TENNESSEE 37660
(423) 343-8070

PROJECT NO. A23123 | ROCBO - DESIGN PROTOTYPE

BURGER KING RESTAURANT

EXTERIOR ELEVATIONS

A-4

CLEARANCE BAR

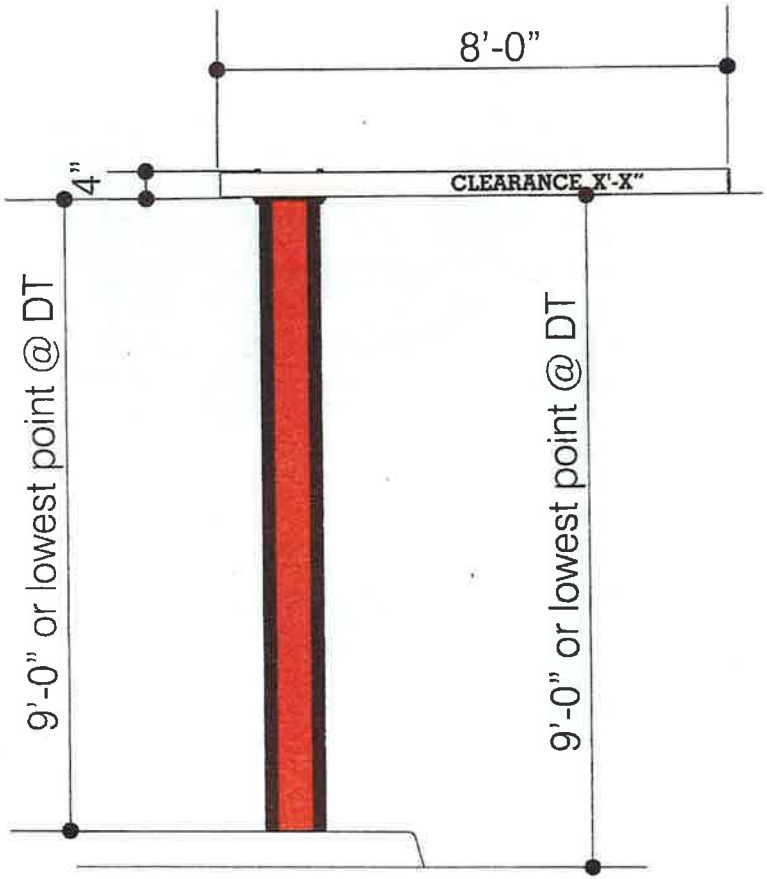

SPECIFICATIONS

- Auto return clearance bar.
- Corrugated panel with pre-finished black.
- Side panel painted black trim with Ruby Red reflective vinyl
- Clearance bar brushed aluminum finish with reflective silver vinyl (sides)
- Copy: black vinyl - front only.

116-DTC-9-0

CUMMINGS

THIS DESIGN REMAINS OUR EXCLUSIVE PROPERTY AND CANNOT BE DUPLICATED WITHOUT WRITTEN CONSENT

THIS IS AN ORIGINAL UNPUBLISHED DRAWING CREATED FOR YOUR PERSONAL USE IN CONNECTION WITH A PROJECT PLANNED FOR YOU BY CUMMINGS SIGNS. IT IS NOT TO BE SHOWN OUTSIDE YOUR ORGANIZATION NOR USED, REPRODUCED, COPIED, OR EXHIBITED IN ANY FASHION UNLESS AUTHORIZED IN WRITING BY AN OFFICER OF CUMMINGS SIGNS.

CUSTOMER APPROVAL:

DATE:

	DATE	BY		DATE	BY
Rev. #1			Rev. #4		
Rev. #2			Rev. #5		
Rev. #3			Rev. #6		

BURGER KING

DRAWING NO: 67978 Q1

DATE: 4-10-2012

S. Hawke

CHANNEL LETTER SET

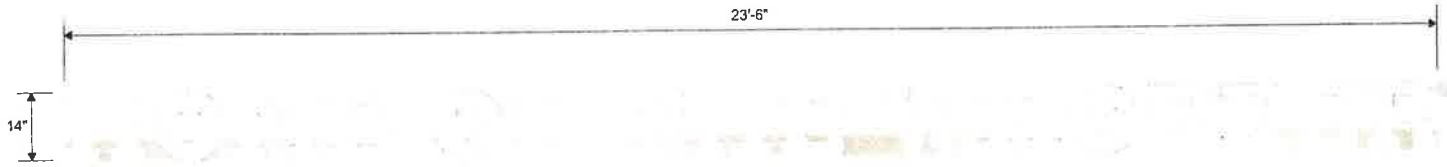

SPECIFICATIONS

- Faces to be .125 2793 White Acrylic with Silver Day/Night vinyl 3M 3635-0453.
- Returns to be painted brushed aluminum with clear coat.
- Trim Cap: 1" Silver Jewelite to match returns.
- White LED Illumination
- Raceway to be painted brushed aluminum with clear coat.

ELECTRICAL

Total Amps: .9
Total Circuits: (1) 20 amp
Volts: 120

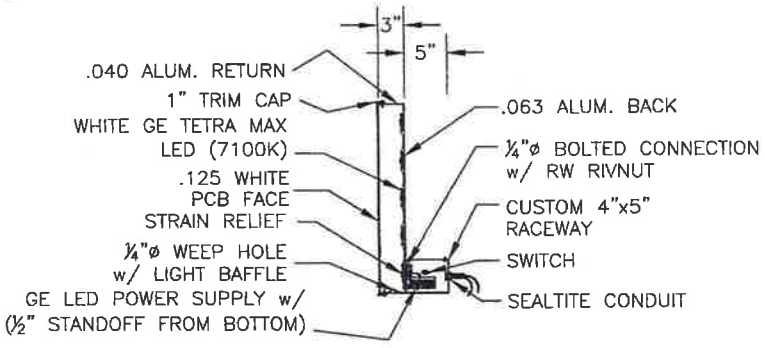

SECTION VIEW
NOT TO SCALE
EQUIPMENT GROUNDED

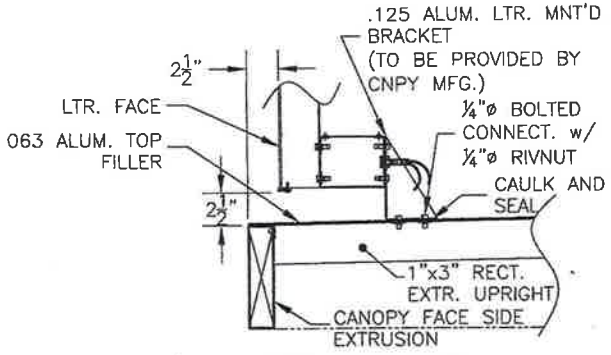

LETTER MOUNT DETAIL
SCALED: 3X

PART # 116-CL14-HOTW-SLVDN

CUMMINGS

THIS DESIGN REMAINS OUR EXCLUSIVE PROPERTY AND CANNOT BE DUPLICATED WITHOUT WRITTEN CONSENT

THIS IS AN ORIGINAL UNPUBLISHED DRAWING CREATED FOR YOUR PERSONAL USE IN CONNECTION WITH A PROJECT PLANNED FOR YOU BY CUMMINGS SIGNS. IT IS NOT TO BE SHOWN OUTSIDE YOUR ORGANIZATION NOR USED, REPRODUCED, COPIED, OR EXHIBITED IN ANY FASHION UNLESS AUTHORIZED IN WRITING BY AN OFFICER OF CUMMINGS SIGNS

CUSTOMER APPROVAL:

DATE:

	DATE	BY		DATE	BY
Rev. #1			Rev. #4		
Rev. #2			Rev. #5		
Rev. #3			Rev. #6		

BURGER KING

DRAWING NO: 68194B
DATE: 2-27-2012
S. Hawke

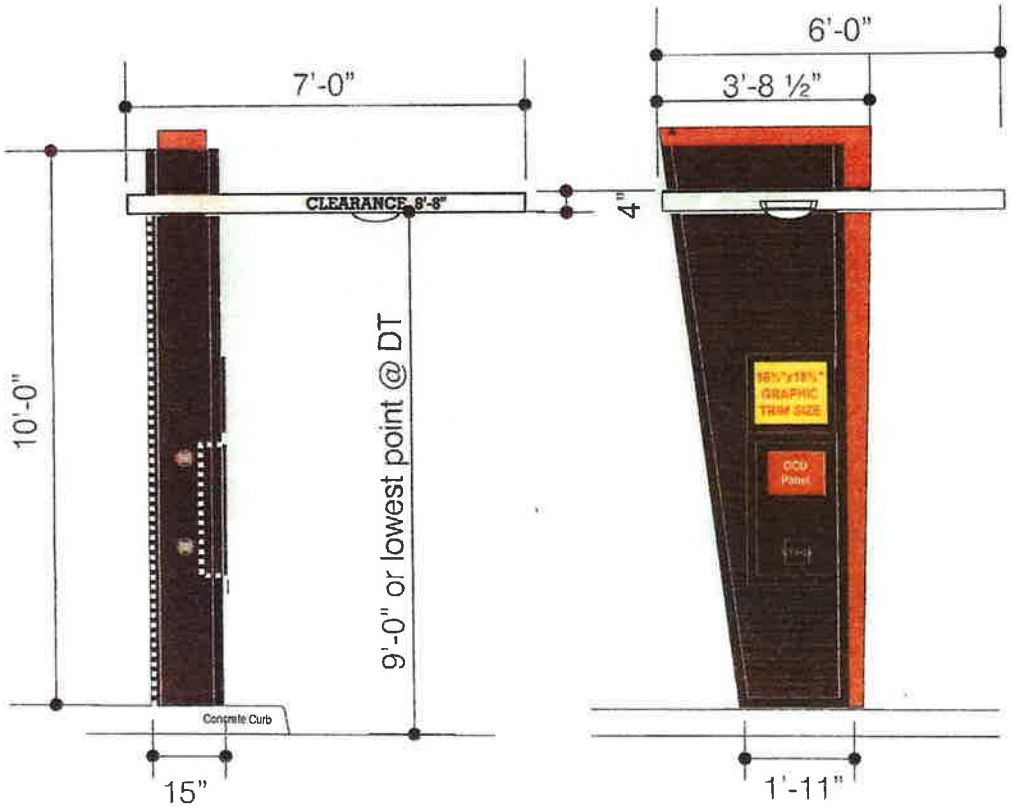

SPECIFICATIONS

- Swing away canopy arm.
- Corrugated panel with pre-finished black.
- OCS cabinet/graphics frame painted black (satin finish)
- Left side end panel/right side retainer panel painted black (satin finish)
- Reveal panel: Ruby Red reflective vinyl.
- Canopy perimeter/underside corrugated ceiling: visible surface to be painted to match brushed aluminum.
- Steel: painted black.
- Clearance copy: 3630-22 black vinyl with reflective white background (left side only)

116-OCU-ND-LOGO-TD
116-OCU-ND-LOGO-SIC

CUMMINGS

THIS DESIGN REMAINS OUR EXCLUSIVE PROPERTY AND CANNOT BE DUPLICATED WITHOUT WRITTEN CONSENT

THIS IS AN ORIGINAL UNPUBLISHED DRAWING CREATED FOR YOUR PERSONAL USE IN CONNECTION WITH A PROJECT PLANNED FOR YOU BY CUMMINGS SIGNS. IT IS NOT TO BE SHOWN OUTSIDE YOUR ORGANIZATION NOR USED, REPRODUCED, COPIED, OR EXHIBITED IN ANY FASHION UNLESS AUTHORIZED IN WRITING BY AN OFFICER OF CUMMINGS SIGNS

CUSTOMER APPROVAL: _____

DATE: _____

	DATE	BY		DATE	BY
Rev. #1			Rev. #4		
Rev. #2			Rev. #5		
Rev. #3			Rev. #6		

BURGER KING

DRAWING NO: 67978 Q4

DATE 4-10-2012

S. Hawke

DOUBLE FACE 20/20 PYLON SIGN

SPECIFICATIONS

- Formed polycarbonate faces with translucent vinyl applied second surface .
- Fabricated aluminum cabinet painted brush aluminum silver.
- Internally illuminated with LED's.
- Cladding painted black - satin finish.
- (2) single face readerboard cabinets with 3 lines of 4 inch black changeable copy.
- Readerboard cabinets painted black - satin finish. Illuminated reveal: .125 red polycarbonate

ELECTRICAL

Total Amps: 5.40
Total Circuits: (1) 20 amp
Volts: 120

LOGO FACE COLORS

3M White Diffuser #3635-30 - Second Surface

3M Translucent Vinyl #3630-33 Red (PMS 485C) - Second Surface

3M Translucent Vinyl #3630-125 Yellow (PMS 1235C) - Second Surface

3M Translucent Vinyl #3630-8703 Blue (PMS274C) - Second Surface

51 A

116-DF-20FT-LED

CUMMINGS

THIS DESIGN REMAINS OUR EXCLUSIVE PROPERTY AND CANNOT BE DUPLICATED WITHOUT WRITTEN CONSENT

THIS IS AN ORIGINAL UNPUBLISHED DRAWING CREATED FOR YOUR PERSONAL USE IN CONNECTION WITH A PROJECT PLANNED FOR YOU BY CUMMINGS SIGNS. IT IS NOT TO BE SHOWN OUTSIDE YOUR ORGANIZATION NOR USED, REPRODUCED, COPIED, OR EXHIBITED IN ANY FASHION UNLESS AUTHORIZED IN WRITING BY AN OFFICER OF CUMMINGS SIGNS

CUSTOMER APPROVAL:

DATE

	DATE	BY		DATE	BY
Rev. #1			Rev. #4		
Rev. #2			Rev. #5		
Rev. #3			Rev. #6		

BURGER KING

DRAWING NO: 67978 P2.1

DATE 2-27-2012

S. Hawke

SINGLE FACE WALL SIGN

1. 3M White Diffuser #3635-30 - Second Surface
2. 3M Translucent Vinyl #3630-33 Red (PMS 485C) - Second Surface
3. 3M Translucent Vinyl #3630-125 Yellow (PMS 1235C) - Second Surface
4. 3M Translucent Vinyl #3630-8703 Blue (PMS274C) - Second Surface
5. Return Color - Natural Matte Aluminum Finish
6. Retainer - Paint to Match Matte Aluminum Finish

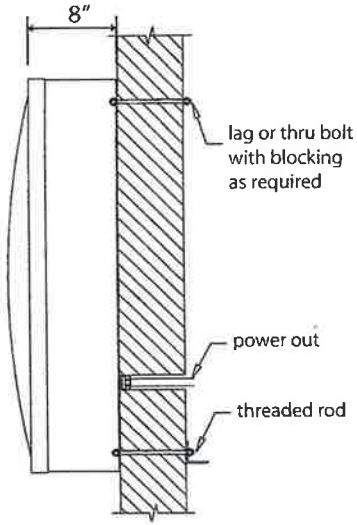

END VIEW

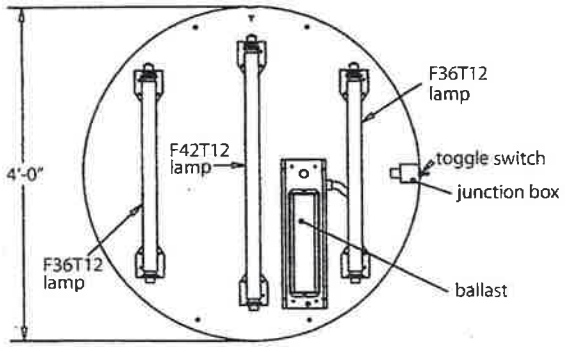

ASSEMBLY/LAMP LAYOUT

SPECIFICATIONS

- Clear polycarbonate faces with translucent vinyl applied second surface and dish formed.
- Fabricated aluminum cabinet painted.
- Aluminum extrusion retainer painted.
- Internally illuminated with Fluorescent lamps.
- Exterior wall mount.

ELECTRICAL

Total Amps: 1.10
Total Circuits: (1) 20 amp
Volts: 120

16 SQ. FT.

PART # 116-WS-4-LOGO-FL

CUMMINGS

THIS DESIGN REMAINS OUR EXCLUSIVE PROPERTY AND CANNOT BE DUPLICATED WITHOUT WRITTEN CONSENT

THIS IS AN ORIGINAL UNPUBLISHED DRAWING CREATED FOR YOUR PERSONAL USE IN CONNECTION WITH A PROJECT PLANNED FOR YOU BY CUMMINGS SIGNS. IT IS NOT TO BE SHOWN OUTSIDE YOUR ORGANIZATION NOR USED, REPRODUCED, COPIED, OR EXHIBITED IN ANY FASHION UNLESS AUTHORIZED IN WRITING BY AN OFFICER OF CUMMINGS SIGNS

CUSTOMER APPROVAL:

DATE:

	DATE	BY
Rev. #1		
Rev. #2		
Rev. #3		
Rev. #4		
Rev. #5		
Rev. #6		

BURGER KING

DRAWING NO: 67978 C

DATE: 2-27-2012

S. Hawke

315 Clinchfield St

315 Clinchfield St

Variance Worksheet – Finding of Facts for:

Case: 12-701-00011 – Property located at 315 Clinchfield St; Control Map 46I, Group A, Parcel 23.00 Requests an variance to [Sect.114-533.(7)(a)(1)(20 and (c)] in order to place a free standing sign and wall signage at this location. The property is located in the B-2, Downtown Business District that allows either type of signage but not both. The petitioners are asking for both types of signs to be located on this parcel and an increase to the allowable square footage of each type of sign.

Variances. Except as provided herein to hear and decide applications for variance from the terms of this chapter, because of exceptional narrowness, shallowness or shape of a specific piece of property which on June 16, 1981, was a lot of record or where, because of exceptional topographic conditions or other extraordinary or exceptional situation or condition of a piece of property, the strict application of this chapter would result in peculiar and exceptional practical difficulties to exception or undue hardship upon the owner of such property, provided that such relief may be granted without substantial detriment to the public good and without substantially impairing the intent and purpose of this chapter. In granting a variance the board may attach thereto such conditions regarding the location, character and other features of the proposed building, structure or use as it may deem advisable in furtherance of the purposes of this chapter. Before any variance is granted, the board must find all of the following, which shall be recorded, along with any imposed conditions or restrictions, in minutes and records and issued in written form to the applicant to constitute proof of the variance:

a. The specific conditions in detail which are unique to the applicant's land. Such hardship is not shared generally by other properties in the same zoning district and the same vicinity.

b. The manner in which the strict application of this chapter would deprive the applicant of a reasonable use of the land.

c. The unique conditions and circumstances are not the result of actions of the applicant taken subsequent to the adoption or amendment of this chapter.

d. Reasons that the variance will preserve, not harm, the public safety and welfare and will not alter the essential character of the neighborhood.

Further, a variance may be granted only if the Board finds that such relief may be granted without substantial detriment to the public good and without substantially impairing the intent and purpose of the zoning plan and this chapter. Variances shall not be granted permitting an increase in floor area or density above the maximum permitted by the zoning district; allowing a use other than those specifically authorized by this chapter in the applicable zoning district; or from the denial of a zoning permit when such denial is due to the fact that such lot has no frontage on a public street unless such lot was a lot of record on June 16, 1981.

Hardship - There is no definition of a "hardship". Some guidelines, based on legal precedent, for applying the concept of unnecessary hardship are:

1. The premises of cannot be used in a manner permitted by the Zoning Ordinance unless the variance is granted.

2. A strict application of the terms of the Zoning Ordinance precludes its use for any purpose to which the land is reasonably adopted.

3. Inability to put the property to its most profitable use DOES NOT constitute a "hardship".

4. Mere inconvenience to the applicant is not sufficient grounds for determining a "hardship". In granting a variance the BZA may not make any decision that is contrary to the purpose and intent of the Zoning Ordinance.

CITY OF KINGSPORT, TENNESSEE

November 2, 2012

Jallie Carletta Sims
P.O. Box 2140
Church Hill, TN 37642

Dear Ms. Sims:

On November 2, 2012, the Kingsport Board of Zoning Appeals made the following decision:

To REHEAR Case No. 09-701-00001: The property located at 907 Cooper Street (Sullivan County tax map 30I, group B parcels 1, 2, 3), concerning the front yard variance. The Board has instructed staff to add this rehearing item to the December's 2012 agenda **if you can provide staff with a new survey** including your house and specifying the amount of variance needed to bring your property into compliance with the City's Zoning Code **before November 15, 2012 at noon**.

If you would have your surveyor contact me, I can provide all the specific information needed. If you have any questions, call me at 423-229-9485.

Sincerely,

Karen Combs
Principal Planner
City of Kingsport

HEREBY CERTIFY THAT THIS IS A CATEGORY I SURVEY AND THE RATIO OF PRECISION OF THE UNADJUSTED SURVEY IS 1:10,000+ AS SHOWN HEREON.

JOE B. FUGATE JR.
TENNESSEE R.L.S. NO

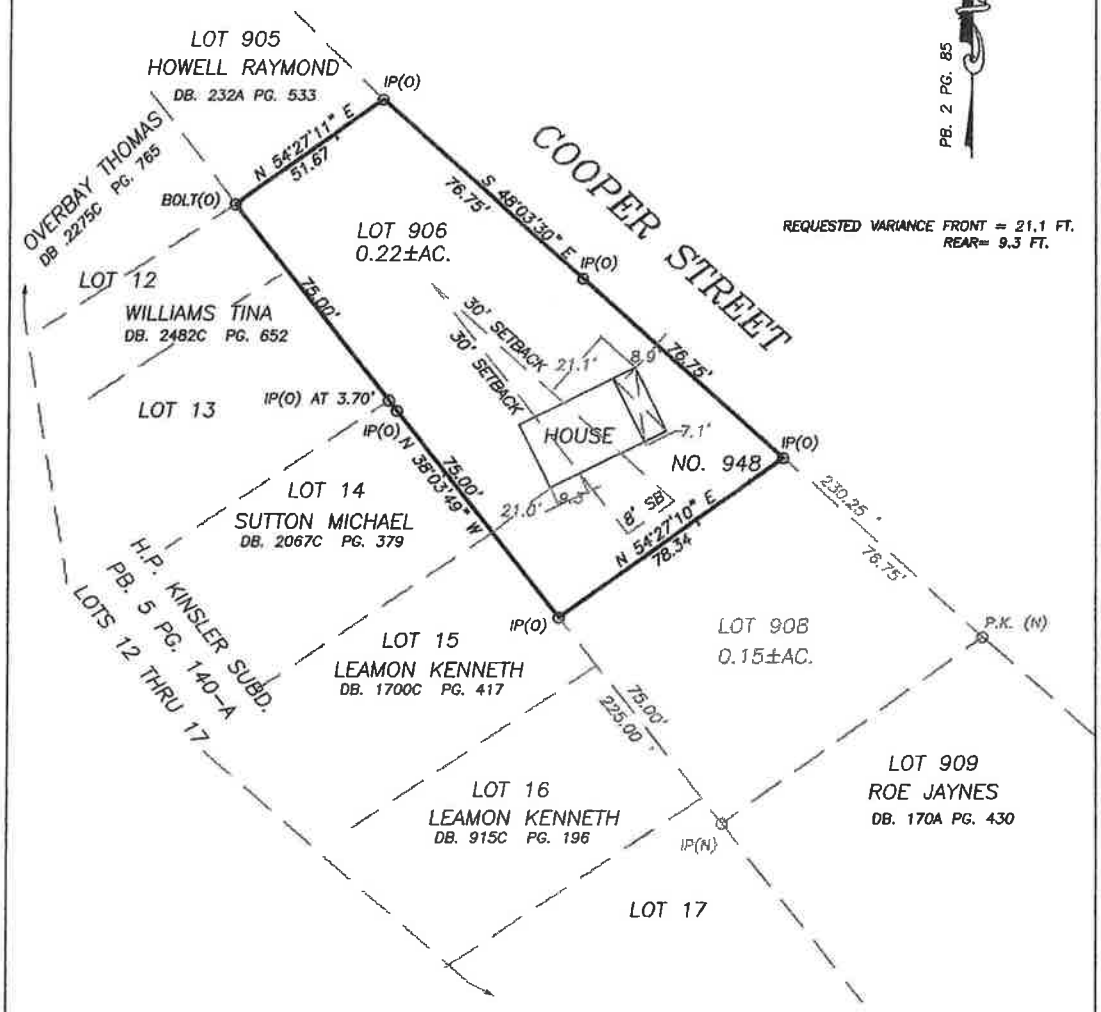

REQUESTED VARIANCE FRONT = 21.1 FT.
REAR= 9.3 FT.

NOTES:

1. THE SURVEY SHOWN HEREON IS BASED ON CURRENT FIELD SURVEY.
2. THIS SURVEY IS SUBJECT TO ANY RIGHTS OF WAYS OR EASEMENTS RECORDED OR NOT RECORDED.
3. NO TITLE INFORMATION WAS FURNISHED THIS SURVEYOR.
4. CURRENT ZONING = R-1B

JOE FUGATE JR. L.S.
17182 BRISTOL HWY.
BRISTOL, VIRGINIA 24202
(540) 466-8158

JOE B. FUGATE JR. REGISTERED LAND SURVEYOR TENNESSEE 1581

DRAWN BY: RLB	SURVEY FOR JALLIE C. SIMS FOR REQUESTED SETBACK VARIANCES 948 COOPER STREET KINGSPORT, TENNESSEE 37665
DATE: 10-02-12	12TH. CIVIL DISTRICT SULLIVAN COUNTY, TENNESSEE
SCALE: 1"= 40'	TAX MAP 30 I (B) PARCEL 1.00 DEED BOOK 2640C PAGE 675

10.12.2012 16:49

10.12.2012 16:49

10.12.2012 16:50

RECEIVED OCT 19 2012

Jallie 'Carlie' Sims
P.O. Box 2140
Church Hill, Tn. 37642

Date: Oct. 19, 2012 Fri.

Leland Leonard
City of Kingsport
225 West Center Street
Kingsport, Tn. 37660

Dear Mr. Leonard,

I met Cory Lewis and his wife of T.C. Lewis and Co. Properties at my vacant land which is now 948 Cooper St in Lynn Garden, Kingsport on about March 10, 2009 *, and gave him permission to build a house 20' x 30' there. His contractor Adam Hendrickson got the permit from the city building division. I was told not to hang around during construction and be an interference, etc. I therefore was told by office manager when to send a check, the amount and what for. About* September 1, 2009 *, Cory Lewis stopped all work at 948 Cooper St. and refused to respond to my contacts when I asked him to show receipts where my money went and to please finish the house. Afterwards a lawsuit I filed against him failed in two mediations over a period of about 2 years with no relief whatsoever, this project was dropped onto my lap. Weary and disappointed, I tried to start somewhere, and I and a few friends jacked up the roof of the porch to be, and dug 3 holes to start construction of a porch for the roof. After being informed by the city inspector that I need to check my property lines I stopped any other action. Cory Lewis had spent about 30 – 40 thousand dollars of my money he could not account for. From the upper pin it looked like I had 20 or more feet. But there is* 12 *ft. from the porch to my property line. Unaware of the contractor's error, my hope is to finish the project. I am humbly asking the Board of Zoning and Appeals to allow me the variance of* 12 *ft. to do this. The porch cost me money, of course, and there are two lights installed on the ceiling there. The porch will be very accommodating as the house is intended as my residence. I am retired and this hardship caused by the contractor has left me broke and in a dilemma. The structure would help me in inclement weather coming and going, as well in case of an emergency, since this entry is from the frontal road. Please allow me the opportunity to proceed with the structure. Thank you very much.*

Sincerely,

Jallie 'Carlie' Sims

Jallie 'Carlie' Sims

Need 3 ft. variance

BP502I02 CITY OF KINGSPORT 10/22/12
Inspection Inquiry - Results Comments 09:29:44

Parcel Number . . . . . : 030I B 00200 000 12 030I 082 380
Property address . . . . . : 948 COOPER ST
Appl, structure nbr . . . . : 09 00000244 000 000
Permit type, seq nbr . . . . : BLD 00 BUILDING PERMIT
Inspection type, seq nbr . : BFT 0001 BUILDING FOOTING
Inspection status, date . . : INSPECTION COMPLETED 6/18/09

Inspection Results Comments
T/S: 06/18/2009 12:07 PM BOMBAILD ---------- DA - Disapproved
not ready and silt fencing not installed

Bottom

Press Enter to continue.
F3=Exit F12=Cancel

BP502I02 CITY OF KINGSPORT 10/22/12
Inspection Inquiry - Results Comments 09:30:15

Parcel Number . . . . . : 030I B 00200 000 12 030I 082 380
Property address . . . . . : 948 COOPER ST
Appl, structure nbr . . . . : 09 00000244 000 000
Permit type, seq nbr . . . : BLD 00 BUILDING PERMIT
Inspection type, seq nbr . : BLAD 0001 BUILDING ADVISE CALL
Inspection status, date . . : INSPECTION COMPLETED 6/22/09

Inspection Results Comments
T/S: 06/22/2009 01:23 PM SPENCERJ ---------- DA - Disapproved
should have been footing inspection. silt fence improperly
installed. way too muddy to pour

Bottom

Press Enter to continue.
F3=Exit F12=Cancel

BP502I02 CITY OF KINGSPORT 10/22/12
Inspection Inquiry - Results Comments 09:30:23

Parcel Number . . . . . : 030I B 00200 000 12 030I 082 380
Property address . . . . . : 948 COOPER ST
Appl, structure nbr . . . . : 09 00000244 000 000
Permit type, seq nbr . . . . : BLD 00 BUILDING PERMIT
Inspection type, seq nbr . . : BLAD 0002 BUILDING ADVISE CALL
Inspection status, date . . . : INSPECTION COMPLETED 10/02/12

Inspection Results Comments DA - Disapproved
T/S: 10/02/2012 01:08 PM SPENCERJ ----------
home owner had questions about finishing the house that her
contract did not finish. advised her to come in and show pl
ans reviewer and/or bldg official of her plans

Bottom

Press Enter to continue.
F3=Exit F12=Cancel

BP502I02 CITY OF KINGSPORT 10/22/12
Inspection Inquiry - Results Comments 09:30:39

Parcel Number . . . . . : 030I B 00200 000 12 030I 082 380
Property address . . . . . : 948 COOPER ST
Appl, structure nbr . . . . : 09 00000244 000 000
Permit type, seq nbr . . . : BLD 00 BUILDING PERMIT
Inspection type, seq nbr . : INR 0001 INSULATION - ROUGH-IN
Inspection status, date . . : INSPECTION COMPLETED 8/12/09

Inspection Results Comments
T/S: 08/12/2009 11:31 AM BOMBAILD ----AE-----------
need to chink around windows
approved w/ exception

Bottom

Press Enter to continue.
F3=Exit F12=Cancel

BP502I02 CITY OF KINGSPORT 10/22/12
Inspection Inquiry - Results Comments 09:30:55

Parcel Number . . . . . : 030I B 00200 000 12 030I 082 380
Property address . . . . . : 948 COOPER ST
Appl, structure nbr . . . . : 09 00000244 000 000
Permit type, seq nbr . . . : PLMB 00 PLUMBING PERMIT
Inspection type, seq nbr . : PR 0001 PLUMB. ROUGH-IN
Inspection status, date . . : INSPECTION COMPLETED 7/24/09

Inspection Results Comments
T/S: 07/24/2009 01:36 PM SPENCERJ ---------- PA - partial approval
underslab basement only

Bottom

Press Enter to continue.
F3=Exit F12=Cancel

BP502I02 CITY OF KINGSPORT 10/22/12
Inspection Inquiry - Results Comments 09:31:03

Parcel Number . . . . . : 030I B 00200 000 12 030I 082 380
Property address . . . . . : 948 COOPER ST
Appl, structure nbr . . . . : 09 00000244 000 000
Permit type, seq nbr . . . : PLMB 00 PLUMBING PERMIT
Inspection type, seq nbr . : PR 0002 PLUMB. ROUGH-IN
Inspection status, date . . : INSPECTION COMPLETED 8/05/09

Inspection Results Comments
T/S: 08/05/2009 03:56 PM SPENCERJ ---------- DA-
kitchen sink dwv incomplete pressure test fail Disapproved

Bottom

Press Enter to continue.
F3=Exit F12=Cancel

BP502I03 CITY OF KINGSPORT 10/22/12
Inspection Inquiry - Inspection Selection 09:29:05

Property address . . . . . : 948 COOPER ST
Parcel Number . . . . . : 030I B 00200 000 12 030I 082 380
Application number . . . . : 09 00000244
Application type . . . . . : NEW SINGLE-FAMILY DWELLING

Type options, press Enter.
1=Select

Opt	Str/Seq	Pmt/Seq	Inspection Type	Seq	Insp	Result/Date
	000 000	PLMB 00	PLUMB. ROUGH-IN	0001	JS	PA 7/24/09
	000 000	PLMB 00	PLUMB. ROUGH-IN	0002	JS	DA 8/05/09
	000 000	PLMB 00	PLUMB. ROUGH-IN	0003	DB	AP 8/12/09
	000 000	PLMB 00	PLUMB. SEWER LINE INSPECTION	0001	JS	AP 11/05/09

Bottom

F3=Exit F11=View 2 F12=Cancel
Roll up or down past the first or last record in file.

BP502I02 CITY OF KINGSPORT 10/22/12
Inspection Inquiry - Results Comments 09:29:30

Parcel Number . . . . . : 030I B 00200 000 12 030I 082 380
Property address . . . . . : 948 COOPER ST
Appl, structure nbr . . . . : 09 00000244 000 000
Permit type, seq nbr . . . : BLD 00 BUILDING PERMIT
Inspection type, seq nbr . : BFR 0001 BUILDING FRAMING
Inspection status, date . . : INSPECTION COMPLETED 8/12/09

Inspection Results Comments
T/S: 08/12/2009 11:31 AM BOMBAILD ------AE-
need to chink around windows

Approved Exception

Bottom

Press Enter to continue.
F3=Exit F12=Cancel

BP502I02 CITY OF KINGSPORT 10/22/12
Inspection Inquiry - Results Comments 09:29:51

Parcel Number . . . . . : 030I B 00200 000 12 030I 082 380
Property address . . . . . : 948 COOPER ST
Appl, structure nbr . . . . : 09 00000244 000 000
Permit type, seq nbr . . . : BLD 00 BUILDING PERMIT
Inspection type, seq nbr . : BFT 0002 BUILDING FOOTING
Inspection status, date . . : INSPECTION COMPLETED 10/12/12

Inspection Results Comments
T/S: 10/12/2012 03:08 PM SPENCERJ ---PA - partial approval
3 pier holes by homeowner appear sufficient to support fr
ont porch. informed owner that the porch is 10' from proper
ty line(approx) and that her front setback is 15'. advised
she come in and speak with building official and/or zoning(B
ZA) person ASAP

Bottom

Press Enter to continue.
F3=Exit F12=Cancel

CITY OF KINGSPORT
BUILDING DEPARTMENT
225 W. CENTER STREET - KINGSPORT, TN 37660
229-9393

Application Number . . . . . 09-00000244 Date 10/22/12
Property Address . . . . . 948 COOPER
Parcel Number . . . . . 030I B 00200 000 12 030I 082 380
Application description . . . NEW SINGLE-FAMILY DWELLING
Property Use . . . . . RESIDENTIAL
Property Zoning . . . . . RESID-SING FAM-LOT> 7,500
Legal description . . . . . .

Owner	Contractor
SIMS, JALLIE CARLETTA	HENDRICKSON CONSTRUCTION 709 LAZYWOOD DR JOHNSON CITY TN 37601 (423) 943-7961

---------- Structure Information ----------

Construction Type . . . . . ORDINARY
Occupancy Type . . . . . .
Roof Type . . . . . ASPHALT SHINGLE
Flood Zone . . . . . .
Sign Type . . . . . .
Fence Type . . . . . .
Other struct info . . . . . .

NUMBER OF UNITS	1.00
DIMENSIONS	20' X 30'
TOTAL LIVING SQ FOOTAGE	1170
SET BACK FRONT	15 PER BZA
SETBACK BACK (REAR)	17'6" PER BZA
SET BACK LEFT	8' MIN
SET BACK RIGHT	8' MIN
NUMBER OF ROOMS	6.00
NUMBER OF STORIES	2.00
SIZE OF CONCRETE FOOTING	12' X 24'
TYPE OF FOUNDATION WALL	BLOCK
WALL CONSTRUCTION OUTSIDE	VINYL
WALL CONSTRUCTION INSIDE	SHEETROCK
NUMBER OF BATHROOMS	2
NUMBER OF BEDROOMS	3.00
TYPE OF HEAT	HVAC
NUMBER OF BATHTUBS	1
NUMBER OF WATER CLOSETS	2.00
KITCHEN SINKS	1.00
NUMBER OF LAVATORIES	2.00

Permit . . . . . BUILDING PERMIT
Additional desc . .

THE APPLICANT WHOSE NAME APPEARS BELOW AGREES TO COMPLY WITH ALL CITY OF KINGSPORT ORDINANCES & CODES & FURTHER AGREES THAT THE ABOVE WORK WILL BE DONE BY A PROPERLY QUALIFIED PERSON. SIGNED: _____ (CONTRACTOR/AGENT)
APPROVED: _____ (BUILDING OFFICIAL)

Kingsport Building Department

BP502I03 CITY OF KINGSPORT 10/22/12
Inspection Inquiry - Inspection Selection 09:29:05

Property address . . . . . : 948 COOPER ST
Parcel Number . . . . . : 030I B 00200 000 12 030I 082 380
Application number . . . . : 09 00000244
Application type . . . . . : NEW SINGLE-FAMILY DWELLING

Type options, press Enter.
1=Select

Opt	Str/Seq	Pmt/Seq	Inspection Type	Seq	Insp	Result/Date
	000 000	BLD 00	BUILDING FRAMING	0001	DB	AE 8/12/09
	000 000	BLD 00	BUILDING FOOTING	0001	DB	DA 6/18/09
	000 000	BLD 00	BUILDING FOOTING	0002	JS	PA 10/12/12
	000 000	BLD 00	BUILDING ADVISE CALL	0001	JS	DA 6/22/09
	000 000	BLD 00	BUILDING ADVISE CALL	0002	JS	DA 10/02/12
	000 000	BLD 00	INSULATION - ROUGH-IN	0001	DB	AE 8/12/09
	000 000	ELEC 00	ELEC. TEMPORARY	0001	KB	AP 3/31/09
	000 000	ELEC 00	ELEC. FINAL	0001	KB	AP 3/31/09
	000 000	ELEC 01	ELEC. ROUGH-IN	0001	CF	AP 8/04/09

More...

F3=Exit F11=View 2 F12=Cancel

1-9-09

10-29-12

To: Karen Combs

From: Tallie 'Carla' Sims

948 Cooper St.

2½ baths

- 1 bath on top of open basement

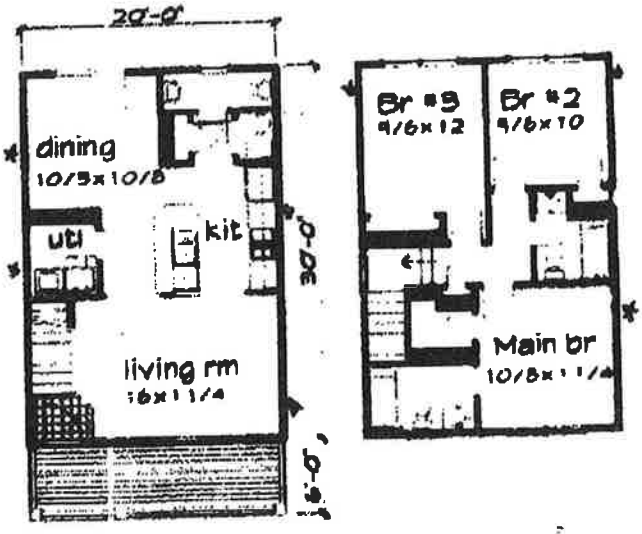

Floor 1 plan Floor 2 plan

Size fl 1: 600 sq ft
Size fl 2: 567 sq ft
Size Total: 1167 sq ft

Width: 20'-0"
Depth: 30'-0"

Porch: 6 ft

Fl 1 ceiling: 8'
Fl 2 ceiling: 8'
Roof pitch: 9/12
Height: 25'-6"

To: Carletta Sims

From: T. C. Lewis + Co. Properties 1-9-09

CITY OF KINGSPORT, TENNESSEE

March 6, 2009

Jallie Carletta Sims
P.O. Box 2140
Church Hill, TN 37642

Dear Ms. Sims:

On March 6, 2009, the Kingsport Board of Zoning Appeals made the following decision:

Case No. 09-701-00001: The property located at 907 Cooper Street (Sullivan County tax map 30I, group B parcels 1, 2, 3), request a fifteen foot (15') front yard variance and a twelve ft, six inch (12'6") rear yard variance to allow for the construction of a house in a R-1B, Single Family Residential District with a front and rear yard setback of thirty (30) feet. [Kingsport Code of Ordinances, Section 114-192.(e)(1)(c)(e)]. Ms. Sims presented the case to the Board. Two individuals spoke against this item wanting the lots to remain vacant. Staff informed the Board that this was a lot of record and was created before zoning was enacted by the City. After a brief discussion by Board members; the Board on a motion made by Bob Winstead, Jr. and seconded by Frank Oglesby voted unanimously 3-0 to grant the variance of a 15 foot front yard setback and a variance up to 12.6 ft. in the rear due to topography of the property and that the lot is a lot of record created before zoning was enacted by the City.

The next step is to telephone the Kingsport Building Division for information on obtaining a building permit (423-229-9393). They are located in the Development Services Building at 201 West Market Street at its intersection with Shelby Street on the first floor below our office.

If you have any questions, call me at 423-229-9485.

Sincerely,

Karen Combs
Senior Planner
City of Kingsport

MEMORANDUM

TO: KINGSPORT BOARD OF ZONING APPEALS

FROM: Karen B. Combs, PLANNER

DATE: February 17, 2009

RE: 907 Cooper Street

The Board is asked to consider the following request:

Case No. 09-701-00001: The property located at 907 Cooper Street (Sullivan County tax map 30I, group B parcels 1,2, 3), request a fifteen foot (15') front yard variance and a twelve ft, six inch (12'6") rear yard variance to allow for the construction of a house in a R-1B, Single Family Residential District with a front and rear yard setback of thirty (30) feet. [Kingsport Code of Ordinances, Section 114-192.(e)(1)(c)(e)].

Board of Zoning Appeals Application

Deadline: 15th of the month prior to meeting

Meeting Date: 1st Thursday of every month

Application Date: 1-20-09

Application Number: _____

Applicant/Owners Name: Jallie Carletta Sims

Owners Signature: Jallie Carletta Sims

Mailing Address: P.O. Box 2140, Church Hill, TN. 37642

Daytime Phone: 423-230-0254 ; fax: 423-367-4272

Representative Name: Jallie Carletta Sims

Address of Property requesting variance: 907 000 Cooper St.; Kingsport, TN. 37660

Poperty Tax Map # 301 group# B parcel # 1, 2, 3

Requested Action: variance on center of 3 lots (lot 907) to construct House 30'x20' + 6' porch (see attachment)

15 ft front

12.5 ft Rear

* Special exception requests require a letter from petitioner addressing the rationale.

A fifty ($50) application fee is required before application will be processed.

Zoned R-1B Requires Front 30'; Rear 30

For Staff Use Only

Building/Zoning Administrator: _____

Completed Site Plans Received: _____

Section of Applicable Code: 114-192(e)(1)(c)(e)

Appl. Received: 2-16-09

Fee Paid: PD

Meeting Date: 3-5-09

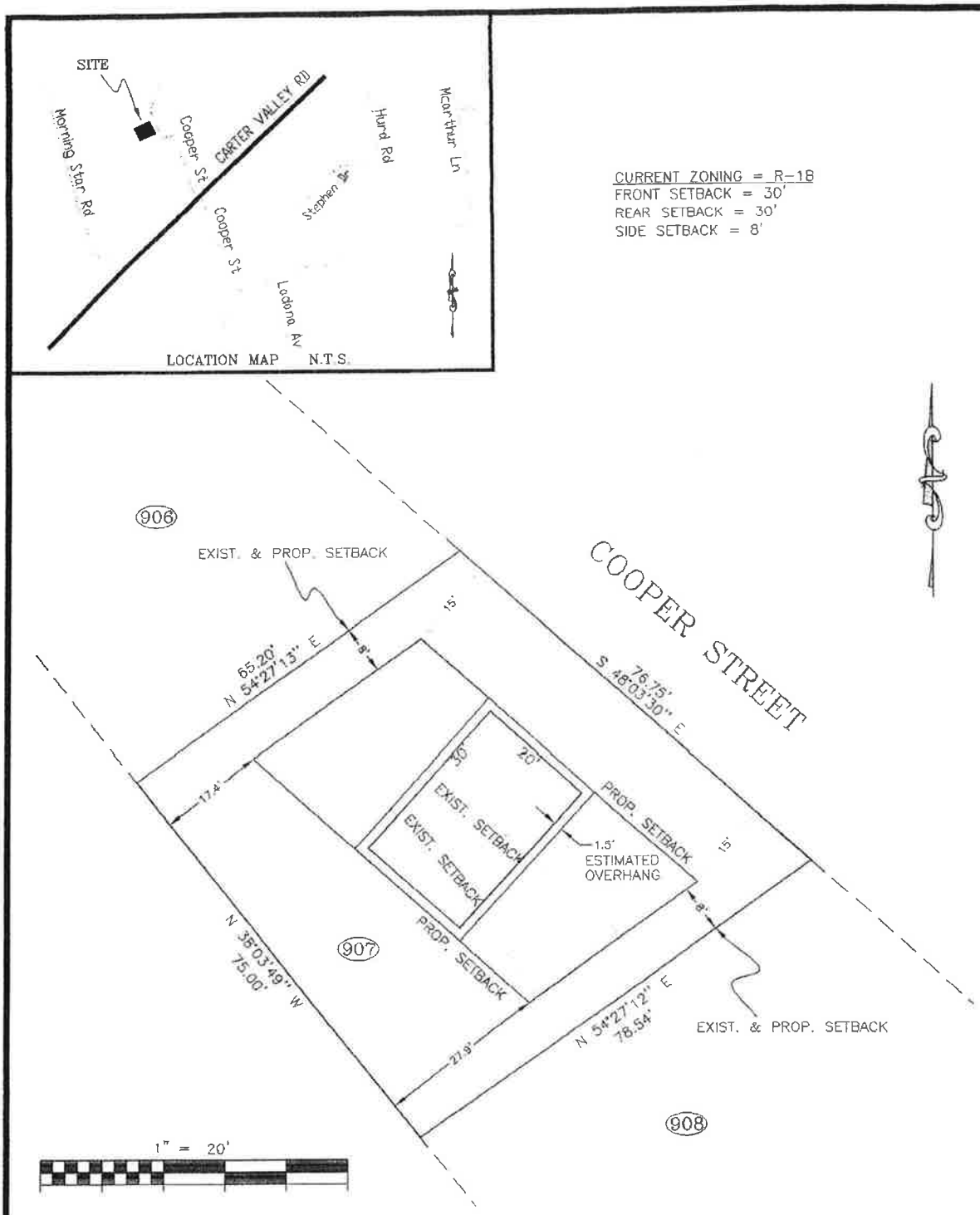

PROPOSED SETBACK VARIANCE
LOT #907
GRAVELLY HEIGHTS SUBDV.
JALLIE CARLETTA SIMS PROPERTY
COOPER STREET
KINGSPORT, TENNESSEE
FEBRUARY 11, 2009

©2009 Glenn A. Shelnutt

Glenn Allen Shelnutt
REGISTERED PROFESSIONAL
Land Surveyor
112 East Unaka Avenue
Johnson City, Tn. 37601
PHONE/FAX (423) 434-9796

1108(1)

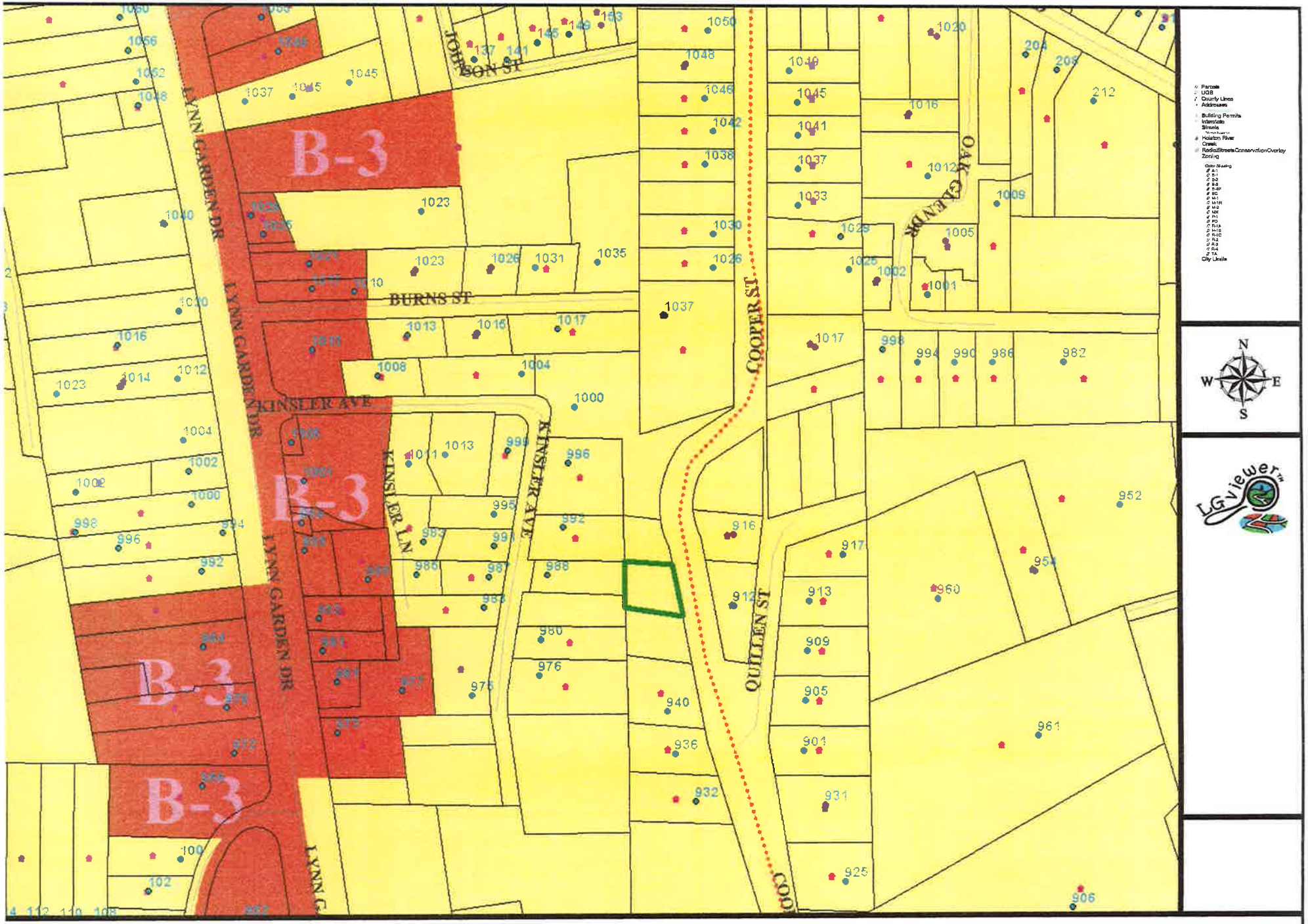

906 Cooper Street

1 in. = 190.3 feet

906 Cooper Street

1 in. = 96.1 feet

LARRY KERNS CONSTRUCTION CO., INC.
1200 Timberidge Trail
Kingsport, TN 37660
423-378-4333
License #: 00027899

Evaluation of : 948 Cooper Street
Carletta Sims (owner)

Things that needs to be corrected and addressed to meet City Codes.

1. Windows changed.
2. New permits bought (HVAC, Plumbing, Electrical, and Building Permits)
3. Stairs need to meet code
4. Insulation installed in attic & basement ceiling
5. Fire rate walls and ceiling in garage.
6. Plumbing finished.
7. Electrical inspection
8. Porch and deck built.
9. Yard graded and seeded
10. Install cabinets, floor covering and door hardware

Item # 1

Front porch (do not know what kind of porch stated in contract) therefore I will put these value on cost to finish. (Cost to jack up porch and repair where pulling from front wall cost $750.00) Concrete porch and block foundation($3,500.00) Wood floor and post ($2,900.00)

Item # 2

Windows needs to be replaced with proper windows. Windows that are in existing house are replacement windows, with no nailing flange and will not meet Kingsport Building codes (Approx replacement cost is $450.00 per unit, vinyl has to be removed, window set and vinyl replaced, each window will have to be special ordered.

Item#3

Stairs are out of code compliance. Nose hangover is 2", code states 1 1/4"max., uneven riser. Install hand rails. (Cost to correct stairs approx. $1,850.00)

Item#4

Cabinets needs to be purchased & installed with tops.
(Cost as per contract allowance for $3,800.00, Kiser quoted$3,615.41)

Item #5

Insulation in attic and basement ceiling ($2,300.00)

Item#6

Need to fireproof ceiling and build wall in garage with fire rated door into unfinished . basement area . (Cost to correct $2,850.00)

Item#7

Finish heat-pump (No permit was bought for work that is already done, no cold air returns are cut out. (Cost as per contract allowance of $5,000.00)

Item#8

Plumbing needs to be finished. Water heater, faucets, commodes, sinks and set out materials. (Permit has expired, new permit required) (Cost $3,000.00)

Item#9

Flooring covering (Cost as per contract allowance or agreed upon by both parties)

Item# 10

Back deck (what size quoted, with or without stairs, I do no know to place value on)

Item # 11

Guttering needs to be installed. ($1,355.00)

Item# 12

Hardware, door locks, mirrors, (allowance $800.00)

Item # 13

Appliances (Allowance $1,600.00)

Item # 14

Grade yard, seed yard, grade & gravel basement driveway, and haul off excess yard trash ($3,500.00 does not include front parking paving and curb due to size not stated.)

Larry Kerns

_____

MINUTES KINGSPORT BOARD OF ZONING APPEALS (BZA)

Thursday November 1, 2012

7 P.M.
Council Room, on the second floor of the City Hall Building

MEMBERS PRESENT:
Leland Leonard, Chairman
Frank Oglesby, Vice Chairman
Bob Winstead Jr
Diane Hills

MEMBERS ABSENT:
Bill Sumner

STAFF PRESENT:
Karen Combs

VISITORS:
Jerry Bentley
Darlene Bentley

Chairman Leonard called the meeting to order. Chairman Leonard then explained the meeting procedures.

Public Hearing:

Case: 12-701-00009 – Property located at 1516 Lawrence Street; Control Map 29E, Group C, Parcel 13.00 Requested a variance of 5 feet 10 inches to [Sect.114-192.(e)(1)(d)] in order to construct a carport in a R-1B Single Family Residential District. The code requires a 8 foot side yard setback. Mr. Bentley was sworn in by Karen Combs. Mr. Bentley presented the case to the Board. In his presentation he stated that the property was acquired prior to 1981 and was a lot of record. The lot is narrow and that it would impossible to place the carport in the rear of the property because the narrowness prohibits the ability to drive a car to the rear. Staff received no phone calls on this item. No one spoke for or against this item. Seeing no one else wishing to speak, Chairman Leonard closed the Public Hearing.

Other Business:

On a motion by Diane Hills, the Board voted unanimously to approve the August 23 and September 6, 2012 minutes as mailed. The BZA stated for the public record the next application deadline on November 15, 2012 at noon and that the next meeting date would be on December 6, 2012. Staff presented to the Board a copy of the new Code of Ordinances. Staff also reminded the Board Members of opportunities to meet the education requirement of four hours every calendar year and let members know how many hours they had accrued. Chairman Leonard presented a request from Carletta Sims to rehear a previous case for 907 Cooper Street. The Board agreed to rehear the case upon the condition that Ms. Sims provide staff with a new survey of the property with the house identified so that the Board may determine exactly how much of a variance to consider. Chairman Leonard directed staff to place the item on December's agenda if the petitioner meets the request of the Board by the deadline for new items.

Adjudication of Cases:

Case: 12-701-00005 – Property located at 859 Indian Trail Drive; Control Map 47P, Group A, Parcel 04.10 Requested a special exception use as provided in Sec. 114-207(d) in order to construct a movie theater. This item was deferred until the November 1, 2012 meeting. Staff reported that the property has been rezoned to B-3 which permits the requested use thus negating a special exception use from this Board.

MOTION: made Frank Olgesby; seconded by Diane Hills – To accept staff's report that the property had been rezoned which permits the requested use by right and therefore negates a decision from this Board.
VOTE: 4-0 to accepted staff report and negate the need for a decision.

Case: 12-701-00009 – Property located at 1516 Lawrence Street; Control Map 29E, Group C, Parcel 13.00

During discussion of this item it was noted that this property was a lot of record and the structure was built prior to zoning. It was also noted that there were multiple structure on surrounding properties that were placed onto or close to the property lines.
PROOF PRESENTED:

1. The specific conditions in detail which are unique to the applicant's land. Such hardship is not shared generally by other properties in the same zoning district and the same vicinity. *This lot is narrow and was created prior to zoning being put into place by the City.*

2. The manner in which the strict application of this chapter would deprive the applicant of a reasonable use of the land.
The placement of the house and narrowness of the lot would prohibit the owner from reasonably using the land for its intended use.

3. The unique conditions and circumstances are not the result of actions of the applicant taken subsequent to the adoption or amendment of this chapter.
The property was a lot of record prior to 1981with the structure built under County regulations, then being annexed into the City of Kingsport under stricter regulations.

4. Reasons that the variance will preserve not harm the public safety and welfare and will not alter the essential character of the neighborhood.
There are multiple structures on surrounding properties that are either on the lot line or very near the lot line. This structure would not be out of character in this neighborhood and would not be detrimental to the adjacent property owners.

MOTION: made by Frank Oglesby; seconded by Bob Winstead – To approve a variance of 5 feet 10 inches to the side yard of the property located at 1516 Lawrence Street.
VOTE: 4-0 to grant the request as requested.

_____ Karen B. Combs, Principal Planner